EKKO
MATERIAL HANDLING EQUIPMENT
MOVING AHEAD

Parts Manual

Lithium Walkie Stacker

EB20CS-177LI/189LI/216LI

Instructions for use

Please read this manual carefully and operate the vehicle safety.

- Do not operate this vehicle without training.
- Please comply with ISO3691 “Safety Specification for Motor Vehicles Industry”.
- Please do not modify or change the repair parameters, including adjusting the pressure. Any loss or damage to the vehicle resulting from such actions will be your responsibility, and doing so will void our warranty commitment.

SPECIAL WARNING:

The company is committed to innovation and sustainable development. As part of this commitment, we continually improve the technology of our products. Therefore, we reserve the right to make changes and improvements to any product described in this specification without prior notice.

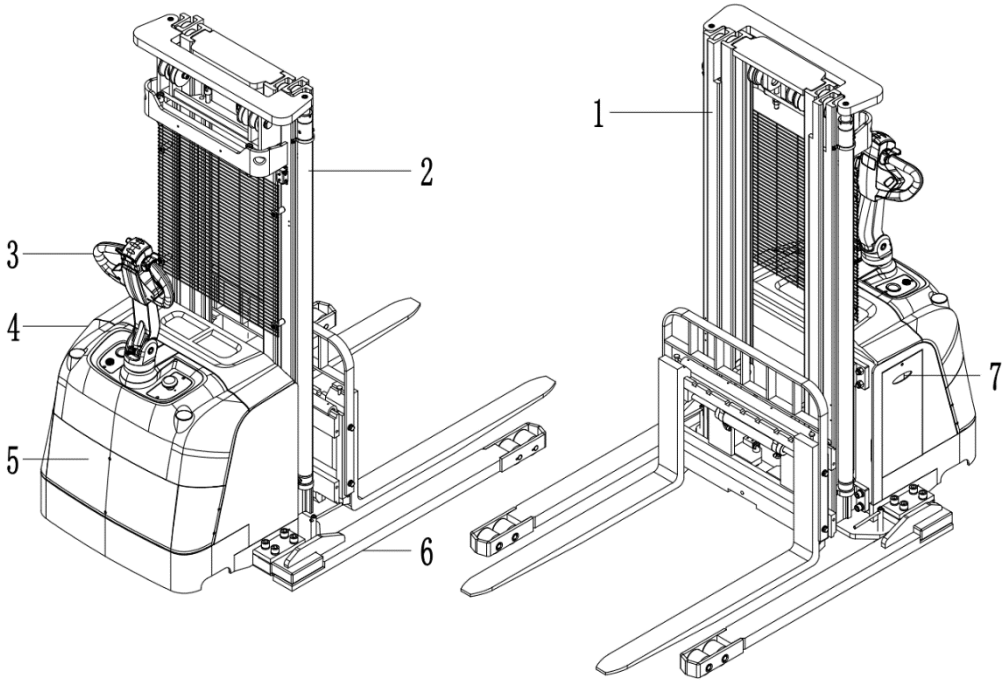

Index	Name	No.	Name
1	Gantry system	5	Drive system
2	Hydraulic system	6	Body system
3	Steering system	7	Electrical system
4	Overlay system		

Note: The assembly and structure content expressed in the parts catalog may not fully appear on your vehicle, but you can search the parts information of your selected vehicle in the parts catalog.

Steering system - Handle accelerator

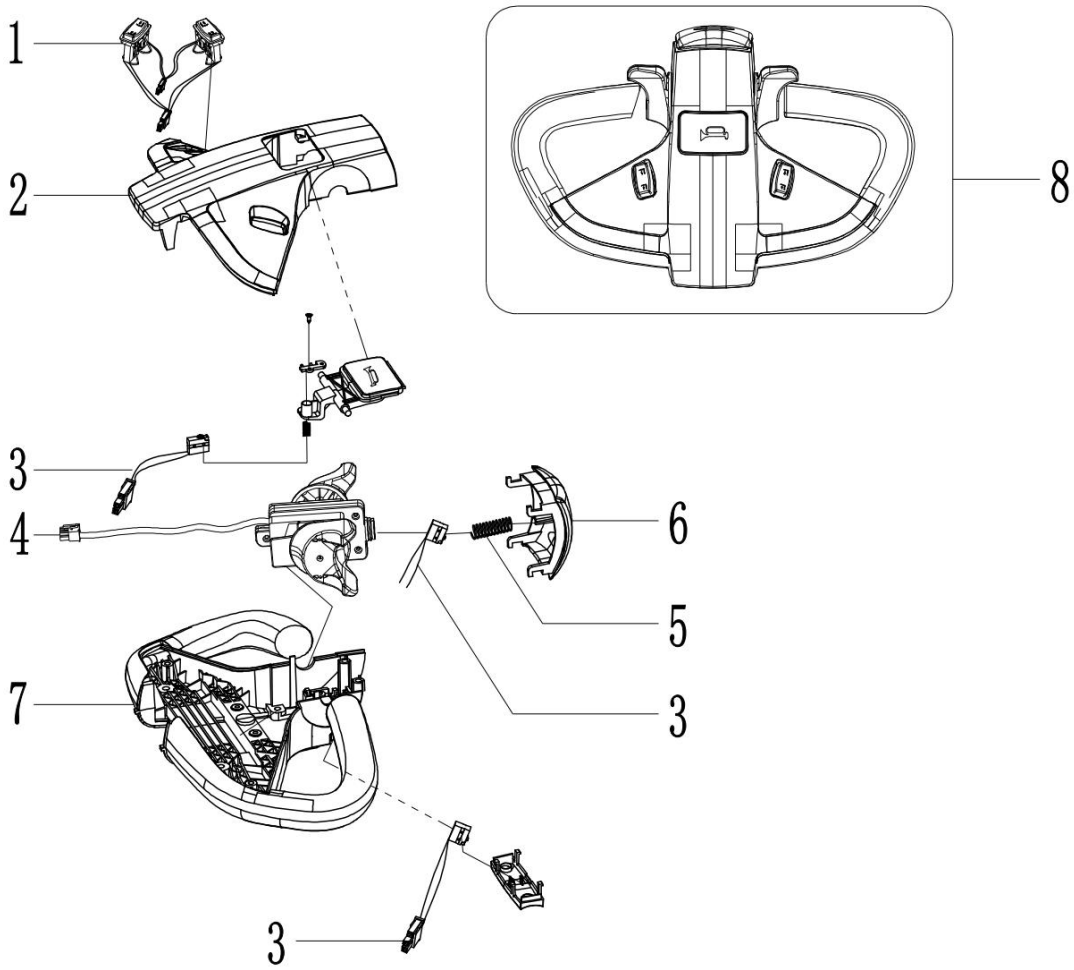

Index	Part No.	Drawing Number	Part Name	QTY
1	11006000073	0502000063	Lift button	2
	11006000075	0502000063	Side shift button	2
2	40000000506	502000032	Upper cover	1
3	11006000062	1303000094	Microswitch	3
4	1100300000010		Accelerator assembly	1
5	40000000507	1510000663	Compression spring	2
6	11006000076	502000031	Belly button	1
7	40000000508	502000033	Under cover	1
8	11003000042	T202-4	Handle	1

Steering system – handlebar assembly

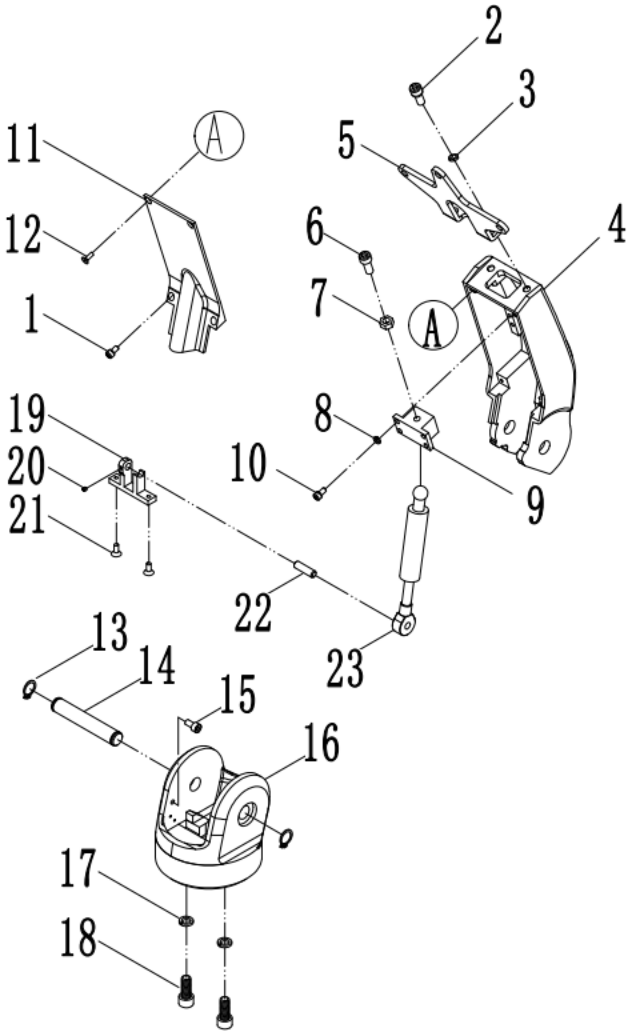

Index	Part No.	Drawing Number	Part Name	QTY
1	22101600011	GB70.1	Hexagonal cylindrical head screw M4x12	2
2	22101600032	GB70.1	Hexagonal cylindrical head screw M8×12	2
3	22501200004	GB93	Spring washer 8	2
4	8B21500000011	QBA30A0300004	handgrip	1
5	8D085001001	QDA-01019A	Handle retaining plate	1
6	22000400032	GB70.1	Screw M8×20	1
7	22400300003	GB6170	Nut M8	1
8	22501200002	GB93	Spring washer 5	4
9	8B21500000020	QBA30A0300003	Gas spring upper seat	1
10	22101600017	GB70.1	Screw M5×12	4
11	8B21500000010	QBA30A0300006	Handle cover	1
12	22101800001	GB70.3	Hexagonal countersunk head screw M4x12	2

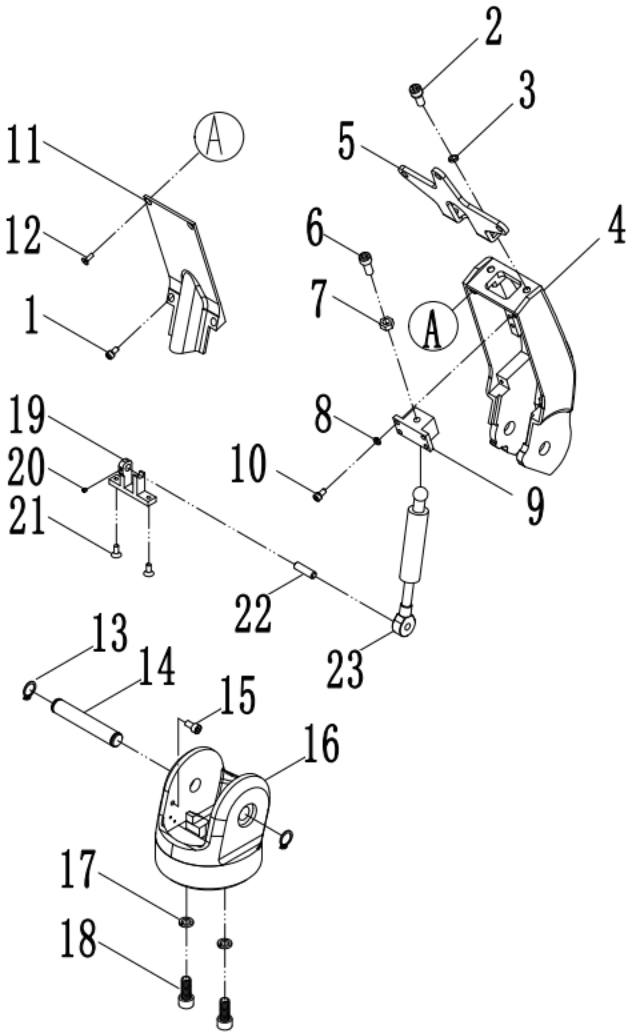

Index	Part No.	Drawing Number	Part Name	QTY	Remark
13	22600900003	GB894.1	Retaining ring 16	2	
14	7200300000502	QBA30A0300005	pin	1	
15	22101600025	GB70.1	Screw M6x12	1	
16	8B21500000012	QBA30A0300001	Handle holder	1	
17	22501200005	GB93	Spring washer 10	5	
18	22101600045	GB70.1	Screw M10 x 25	2	
19	8B21500000013	QBA30A0310000	Gas spring lower seat	1	
20	2210270000008	GB78	Inner hexagon cone end setting screw M4x5	1	
21	22101800022	GB70.3	Hexagonal countersunk head screw M5×12	2	
22	7200300000503	QBA30A0300007	pin	1	
23	7200901000012	QBA30A0300002	Gas spring	1	

Steering system - Electronic steering assembly

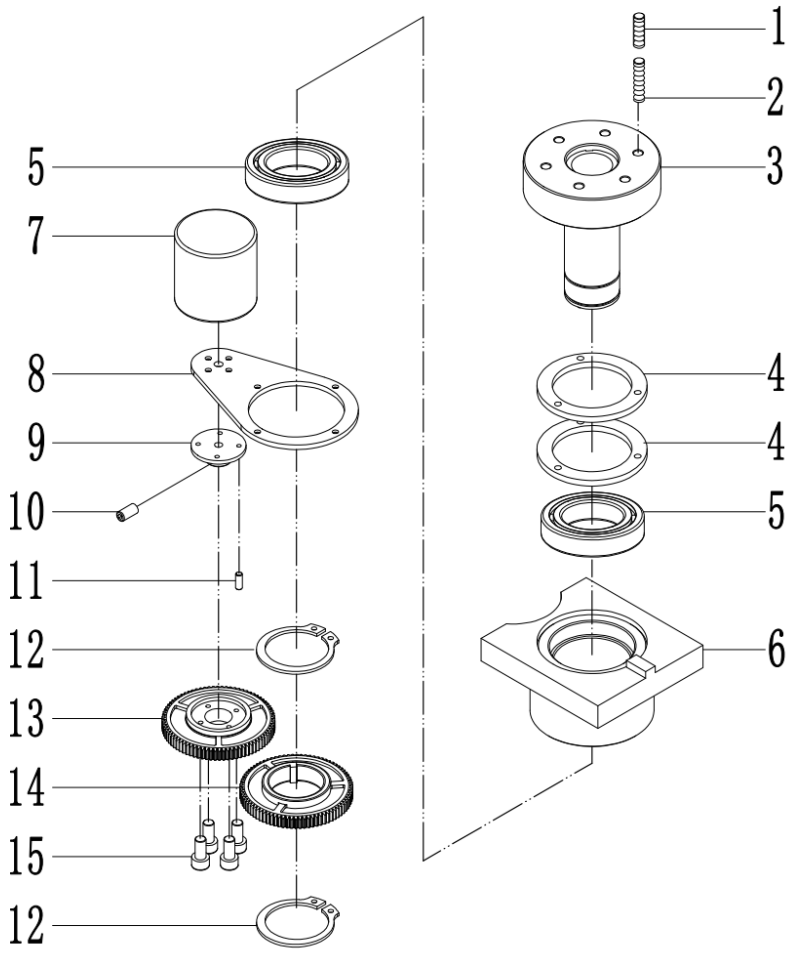

Index	Part No.	Drawing Number	Part Name	QTY	Remark
1	22102600004	GB77	Screw M8×8	6	
2	72009040023	QDA-01048	Brake pads press spring	6	
3	8D082009001	QDA-01040	Steering shaft welded assembly	1	
4	71001200012	QDA-01034	Steering brake pads	2	
5	23000100004	GB276	Bearing 61908-Z	2	
6	8D082009002	QDA-01045	Steering seat assembly	1	
7	11002000010	QBA25H-1350005	Angle sensor	1	
8	72001000165	QDA-01037	Steering gear retaining plate	1	
9	72003000073	QDA-01038	Steering gear fixed shaft	1	
10	22102600001	GB77	Screw M5×6	1	
11	22101800001	GB70.3	Screw M4x12	4	
12	22600900005	GB894.1	Retaining ring 40	2	

Drive system

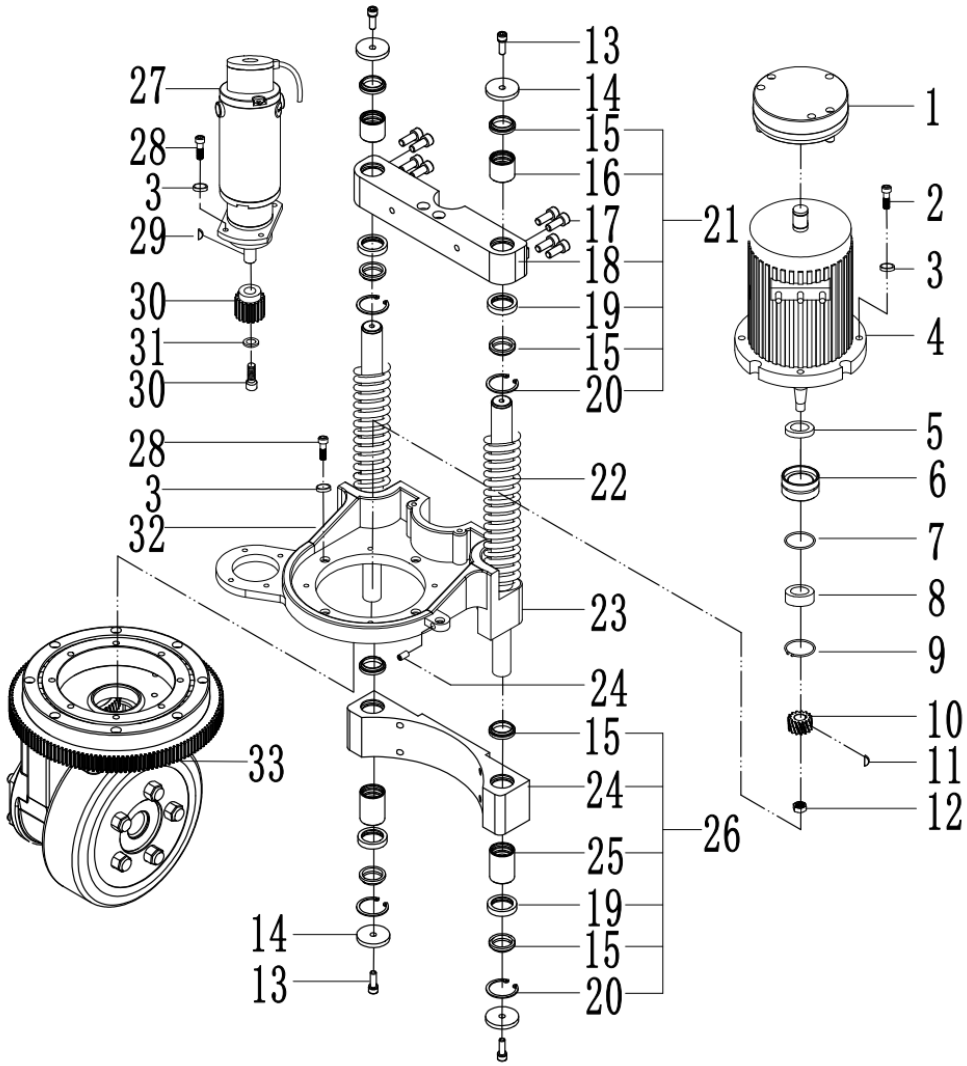

Index	Part No.	Drawing Number	Part Name	QTY
1	71001200004	BOA-02010	Electromagnetic brake	1
2	22101600036	GB70.1	Screw M8×30	4
3	22501200004	GB93	Spring Cushion 8	12
4	1100800000013	QBA30A0200001	Motor 1.5KW	1
5	21000500002		Skeleton oil seal Φ25×Φ40×7	1
6	72004000081	QBA-02030A	Motor support seat	1
7	21001300003	GB1235	O-ring D56×3.5	1
8	23000100001	GB276	Bearing 6204	1
9	22600700002	GB 893.1	Hole retaining ring 47	1
10	71005000007	QBA-02036	Motor bevel gear	1
11	22900400001	GB1096.1	Semicircular key 4 x 6.5 x 16	1
12	22403300001	GB6183.1	Nut M12	1

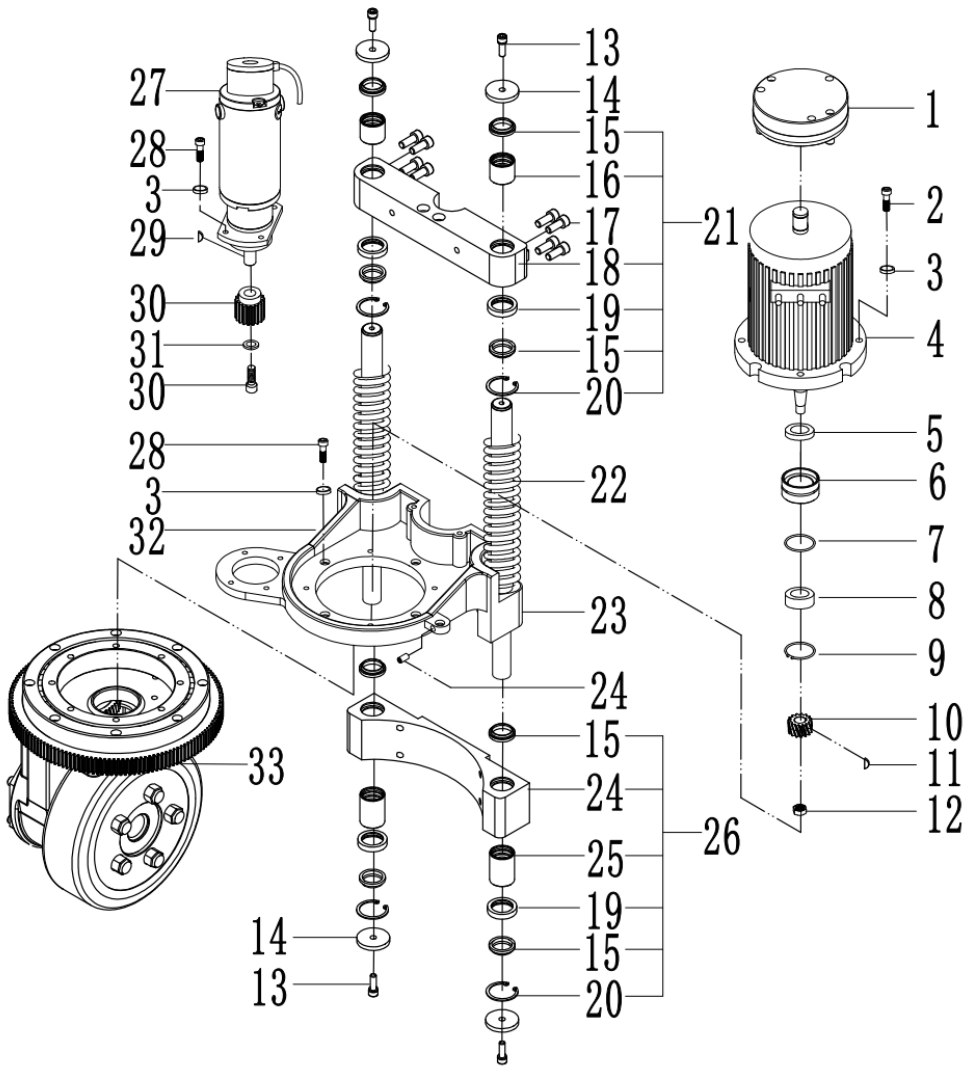

Index	Part No.	Drawing Number	Part Name	QTY
13	22101600033	GB70.1	Screw M8×16	4
14	72001000446	QBA-02006	Floating frame limit block	4
15	21000300006		DHS28 Dust ring 28 x 36 x 6 x 4.5	8
16	7500030000036	QDA15A-02010A	Support ring	2
17	22101600045	GB70.1	Hexagonal cylindrical head screw M10×25	16
18	72001000447	QDA15A-02012	Upper retaining block	1
19	72004000099	QDA15A-02013	Dust ring holder	4
20	22600700017	GB893.1	Hole retaining ring 40	4
21	8D21400100004	QDA15D0200100	Upper fixing block assembly	1
22	72009040006	QDA15A-02016B	Floating spring	2
23	8D21400100005	QDA15D0200300	Floater assembly	1
24	72006000114	QDA15A-02014	Lower retaining block	1

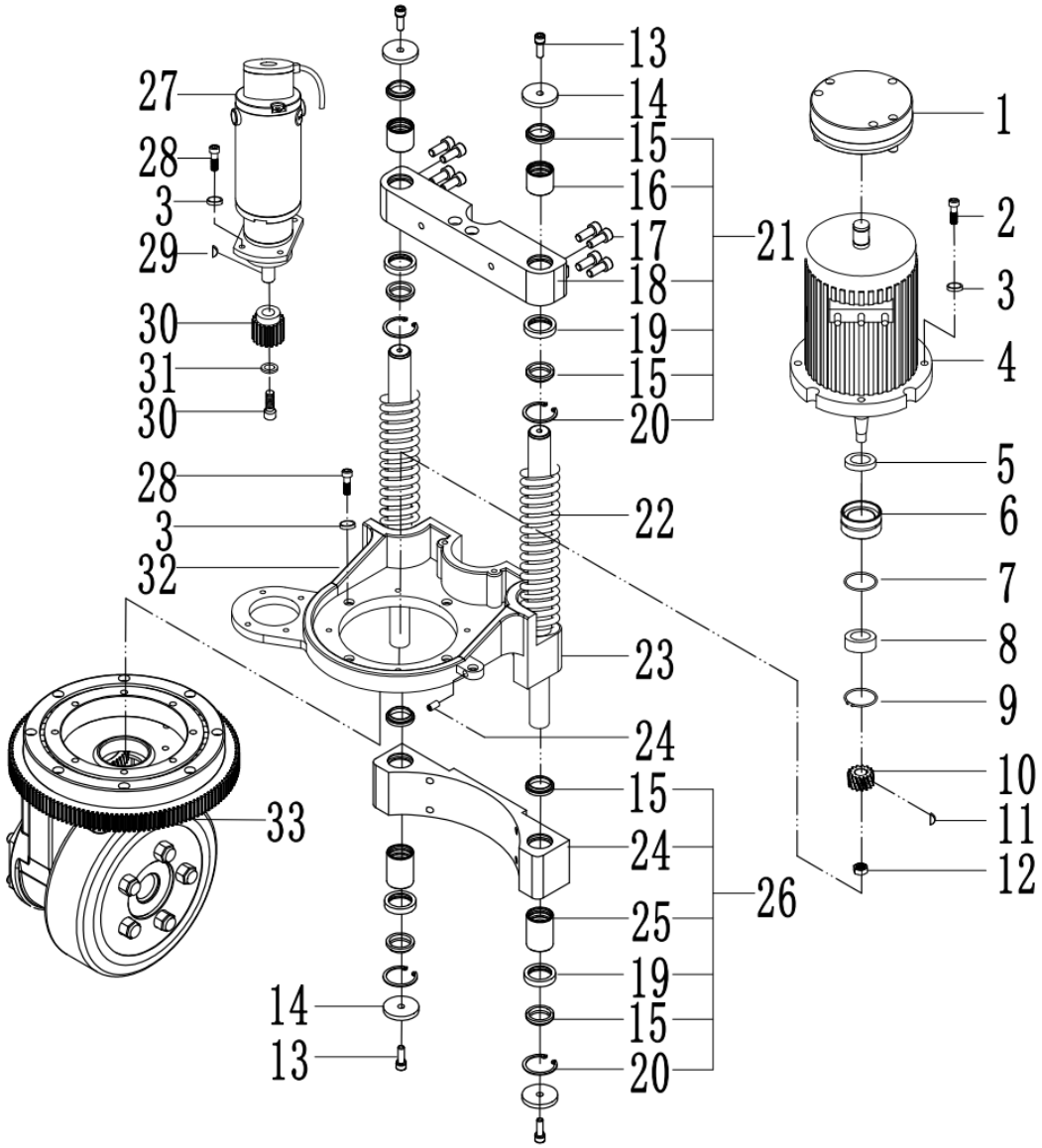

Index	Part No.	Drawing Number	Part Name	QTY	Remark
25	7500030000035	QDA15A-02010B	Support ring	2	
26	8D21400100006	QDA15D0200200	Lower fixing block assembly	1	
27	11008000014	QBA25H-1350006	Steering motor	1	
28	22101600035	GB70.1	Screw M8×25	4	
29	22900100005	GB1096	Key 5 x 30	1	
30	71005000012	BOA-01206	Steering pinion	1	
31	22500500003	GB96.1	Washer 6	1	
32	22101600025	GB70.1	Screw M6x12	1	
33	71001300003	QBA25H-21000	Gear box assembly	1	

Drive system - Gearbox assembly

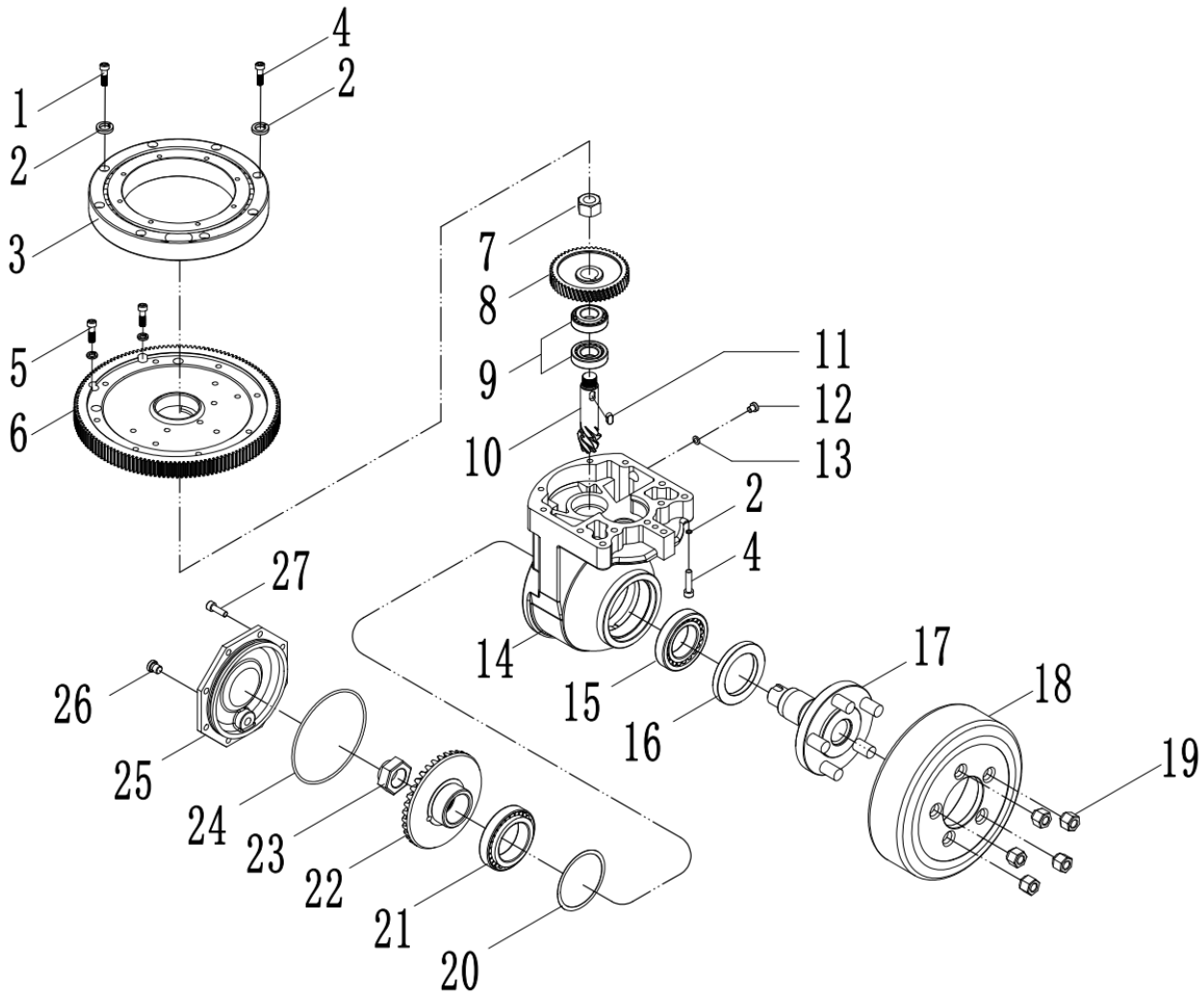

Index	Part No.	Drawing Number	Part Name	QTY	Remark
1	22101600036	GB70.1	Screw M8×30	2	
2	22501200004	GB 93	Spring Cushion 8	19	
3	23009900002	QBA-02025	Turntable bearing	1	
4	22101600038	GB70.1	Screw M8×40	13	
5	22101600035	GB70.1	Screw M8×25	4	
6	71005000008	QBA-02209	Gearing	1	
7	22400600004	GB6176	Nut M20 x 1.5	1	
8	71005000006	QBA-02205	Housing helical gear	1	
9	23000500003	GB297	Bearing 30205	2	
10	71005000005	QBA-02210	Spiral bevel gear (small)	1	
11	22900100002	GB1096	Flat key 8 x 7 x 14	1	
12	72007000018	QBA-02220	Oil discharge plug M16	1	

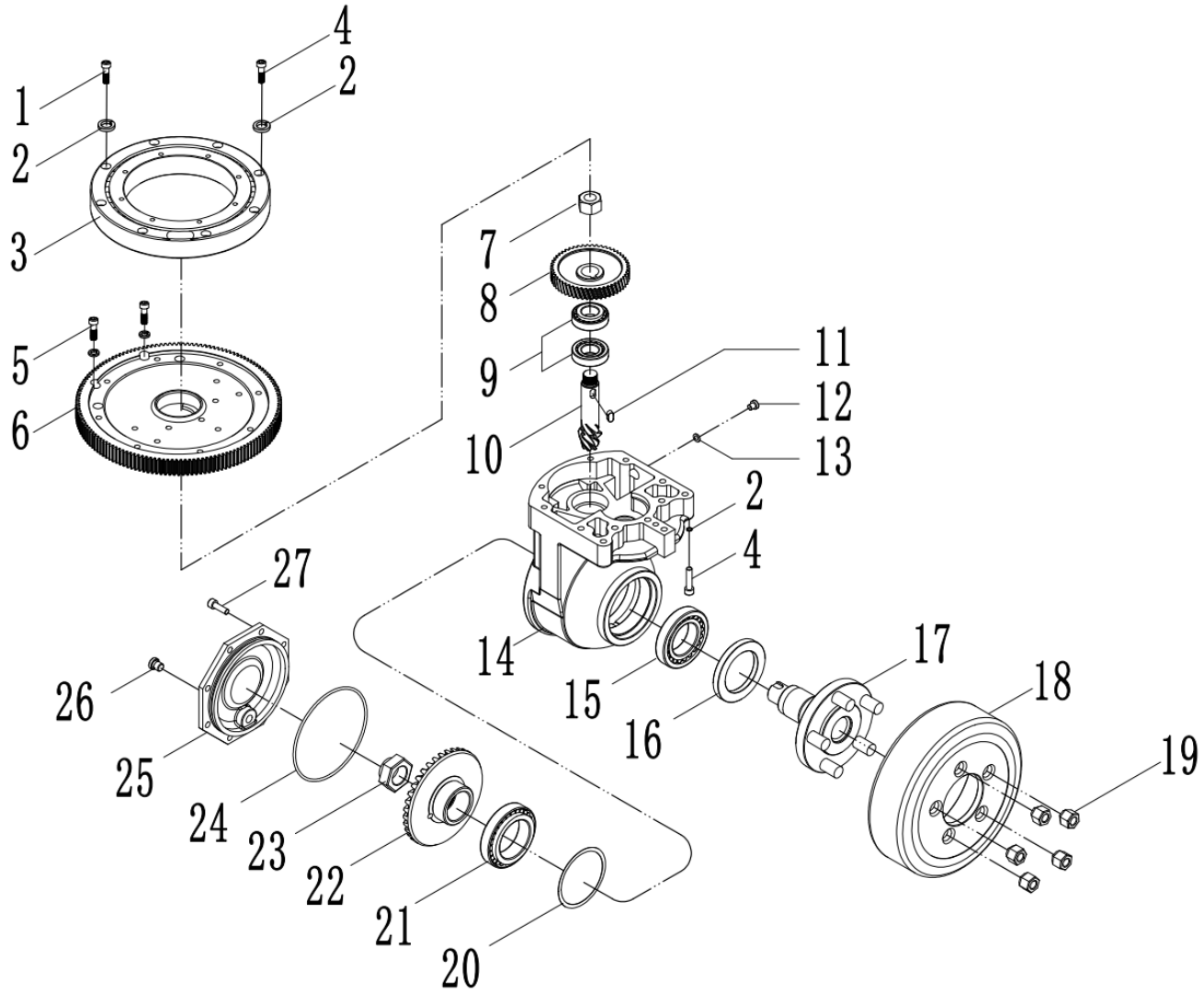

Index	Part No.	Drawing Number	Part Name	QTY	Remark
13	21001100003	JB982	Combined washer 16	1	
14	72006000055	QBA-02206	Gearbox housing	1	
15	23000500004	GB297	Bearing 30210	1	
16	21000500001	T-MF-035	UKS skeleton oil seal 65×95×10	1	
17	71005000004	QBA-02218	Drive wheel spline shaft	1	
18	71003000041	QBA-02031	Driving wheel	1	
19	72008000003	QBA-02032	Lock nut	5	
20	72001000381	QBA-02044	gasket	1	
21	23000500002	GB297	Bearing 32012×2	1	
22	71005000005	QBA-02211	Spiral bevel gear	1	
23	72008000002	QBA-02219	nut	1	
24	21000100004	GB3452.1	O-ring d140×3.55	1	

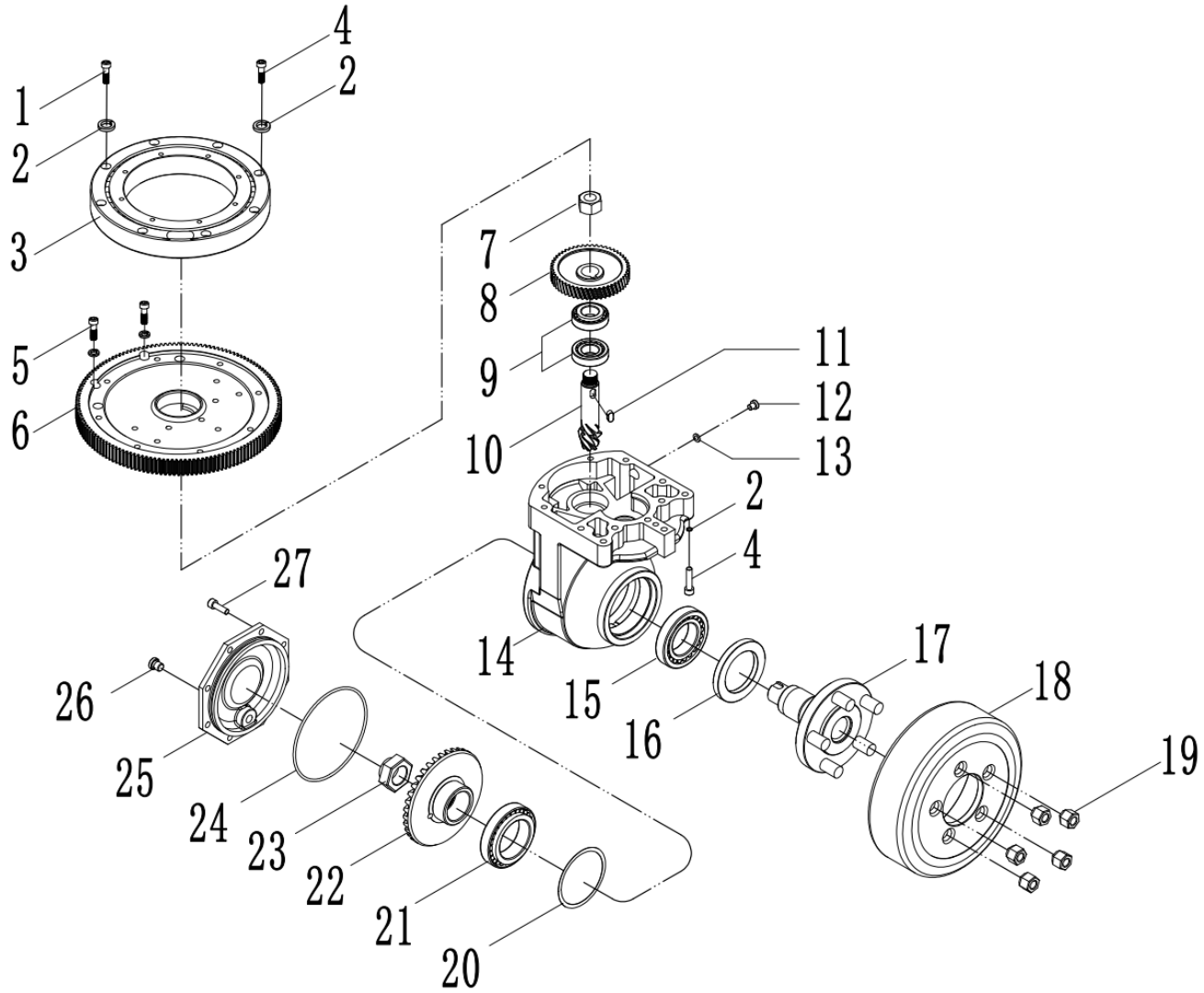

Index	Part No.	Drawing Number	Part Name	QTY	Remark
25	72006000056	QBA-02037	Gearbox side cover	1	
26	72007000017	QBA-02009	Oil discharge plug M12 (with combination pad)	1	
27	22101600034	GB70.1	Screw M8×20	8	

Body system

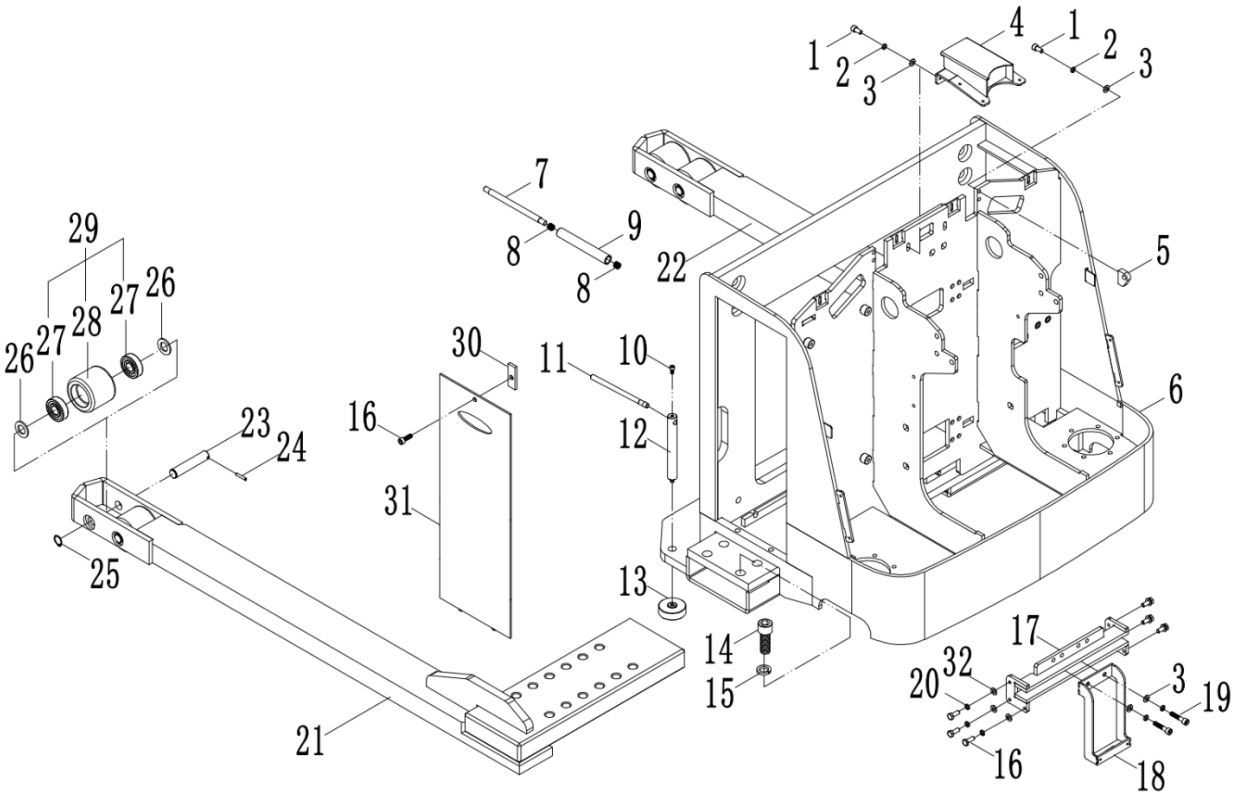

Index	Part No.	Drawing Number	Part Name	QTY	Remark
1	22101600025	GB70.1	Screw M6x12	4	
2	22501200003	GB93	Spring washer 6	6	
3	22500100005	GB97.1	Flat washer 6	6	
4	7200500000315	QBA30A0900004	u-clamp	4	
5	7200100001691	QBA30A0920003	Fixed support	2	
6	8D092001005	QDA15DK0421000 240509	Body Frame	1	
7	72003000154	QDA-04042	Battery pulley shaft	6	
8	23000700001	JB7918	Needle roller bearing 12×15×10	12	
9	72004000105	QDA-04041	Battery roller	6	
10	22101600025	GB70.1	Hexagonal cylindrical head screw M6x12	2	
11	30170000099	QDA15K-03103	Wrench bar	1	
12	30170000098	QDA15K-03101	Ejector pin	2	

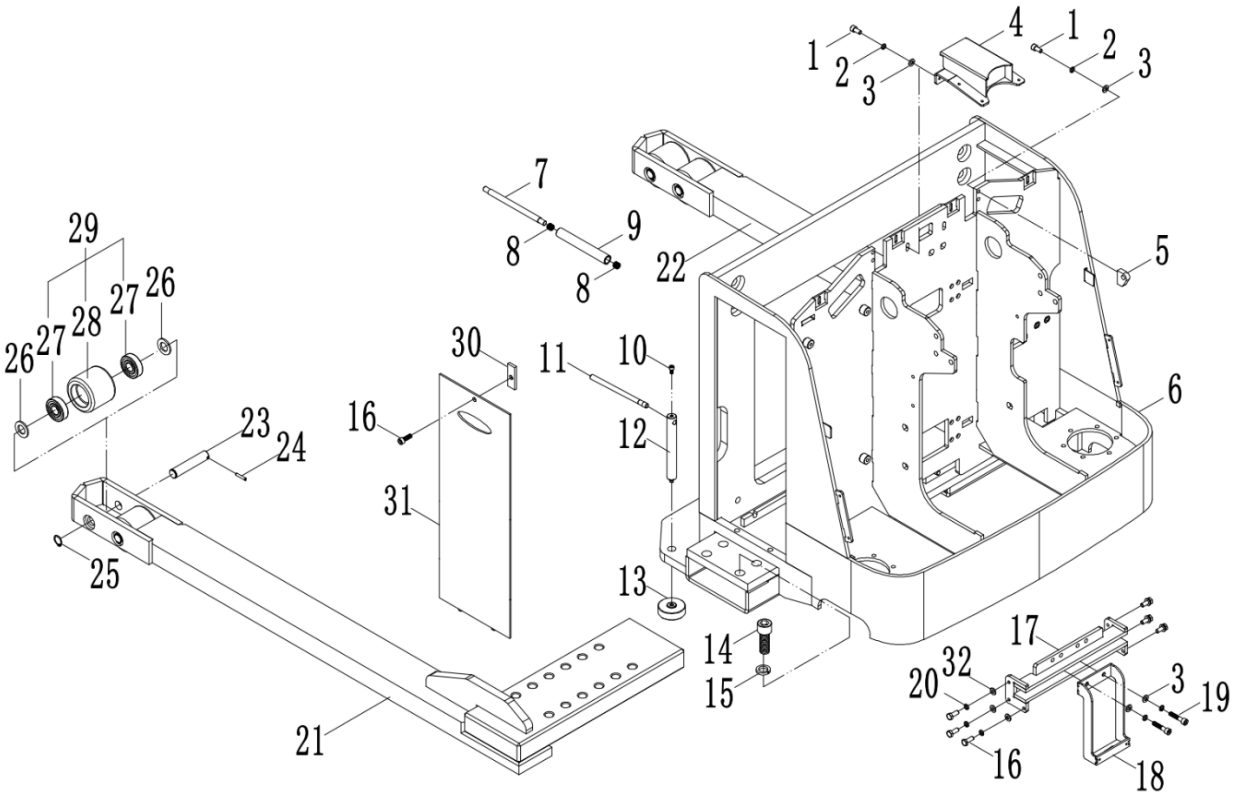

Index	Part No.	Drawing Number	Part Name	QTY	Remark
13	72002005194	QDA15K-03102	Top block	2	
14	22101600094	GB70.1	Hexagonal cylindrical head screw M20×55	8	
15	22501200009	GB93	Standard spring washer 20	8	
16	22101600034	GB70.1	Screw M8×20	7	
17	8B21200400002	QBA30A0420000 240509	Arm guard base	1	
18	8D16200300002	QDA1502CM0400020	Rear cover seat	1	
19	22101600038	GB70.1	Screw M8×40	2	
20	22501200004	GB93	Spring pad 8	6	
21	8D272000002	QDA1502CMS0421100 240509	Left leg	1	
22	8D272000003	QDA1502CMS0421200 240509	Right leg	1	
23	72003000155	QDA12C-01042	pin	4	
24	22800700005	GB879.1	Elastic pin Φ5 x 28	4	

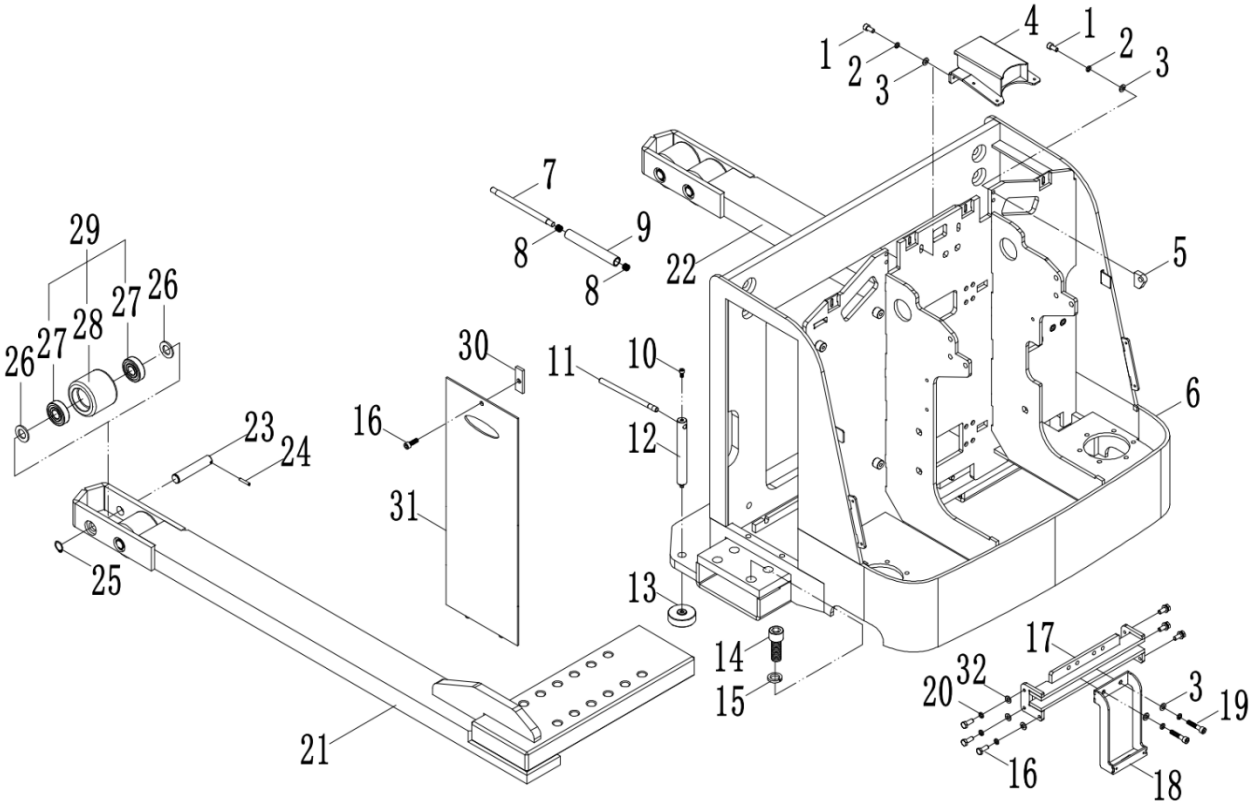

Index	Part No.	Drawing Number	Part Name	QTY	Remark
25	22600900002	GB894.1	Retaining ring 20	4	
26	22500100012	GB97.1	Flat washer 20	8	
27	23000100010	GB276	Bearing 6304	8	
28	71003000040	QDA-04130	Wheel Φ80×70	4	
29	8D21400100003	QDA15D0400010	Fork wheel assembly	4	
30	72001000646	QQA-01043	Door retaining plate	1	
31	8D21200100001	QDA15D0420000	Side door	1	
32	22500100006	GB97.1	Flat pad 8	6	

Body system - Balance wheel

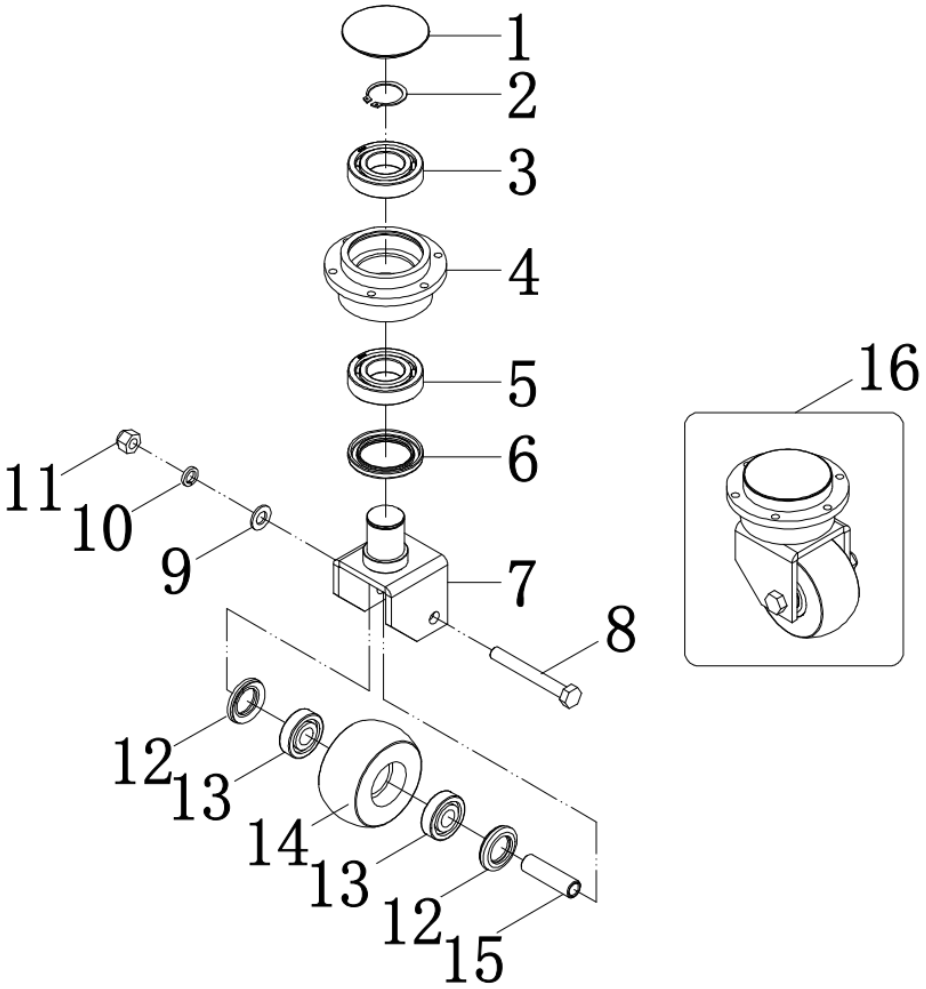

Index	Part No.	Drawing Number	Part Name	QTY	Remark
1	75000300106	QBA-00101	capping	1	
2	22600900012	GB894.1	Retaining ring 48	1	
3	23000100008	GB276	Bearing 6208	1	
4	105030293	QBA-04053	Universal wheel outer ring	1	
5	2300060000003	GB292	Angular contact ball bearing 7208B	1	
6	2100040000040	GB13871	Lip sealing ring B55×80×8	1	
7	6600000000021		Shaft welding assembly	1	
8	22000300030	GB5782	Hexagon head bolt M14 x 110	1	
9	22500100009	GB97.1	Flat pad 14	1	
10	22501200007	GB93	Spring pad 14	1	
11	22403000011	GB889.1	Lock nut M14	1	
12	75000300030	QBA20B	Dust ring	2	

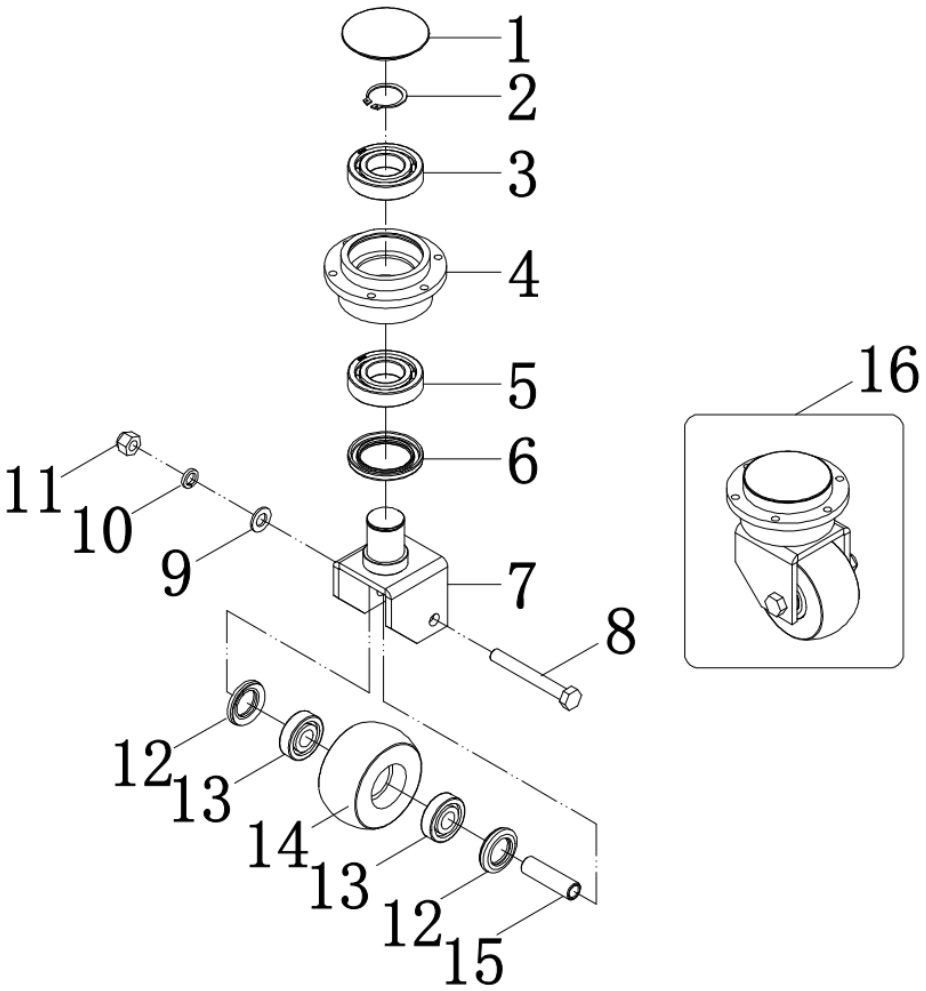

Index	Part No.	Drawing Number	Part Name	QTY	Remark
13	23000100010	GB276	Bearing 6304	2	
14	71003000039	QBA-04026	Universal wheel	1	
15	72004000334	QBA-04059	Tube axis	1	
16	71003000042	QBA-04050	Universal wheel assembly	2	

Overlay system

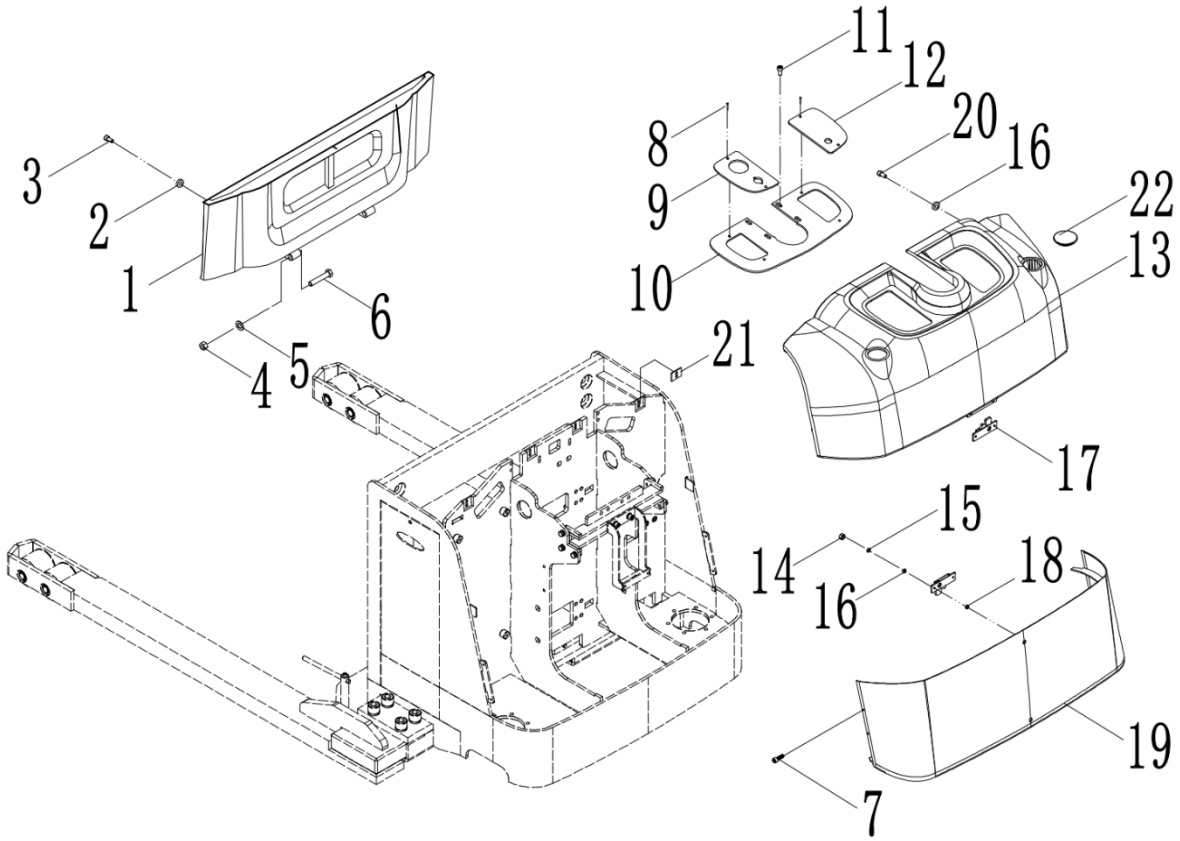

Index	Part No.	Drawing Number	Part Name	QTY	Remark
1	7500010000144	QDA15D0920001	Battery cap	1	
2	7900040000005	QBA30A0920002	High strength magnet	2	
3	2210430000005	GB846	Screw M4x12	2	
4	22400300006	GB6170	Nut M12	2	
5	22500100008	GB97.1	Flat pad 12	2	
6	2200030000050	GB5782	Bolt M12 x 60	2	
7	22101700008	GB70.2	Hexagonal semi-round head screw M8×16	4	
8	22101800018	GB70.3	Countersunk head screw M4x8	4	
9	7200100002263	QBA30A0900005	Left lamina	1	GREEN RAL6018
	7200100001716	QBA30A0900005	Left lamina	1	Yellow RAL1037
10	7200100002264	QBA30A0900006	Instrument board	1	GREEN RAL6018
	7200100001717	QBA30A0900006	Instrument board	1	Yellow RAL1037

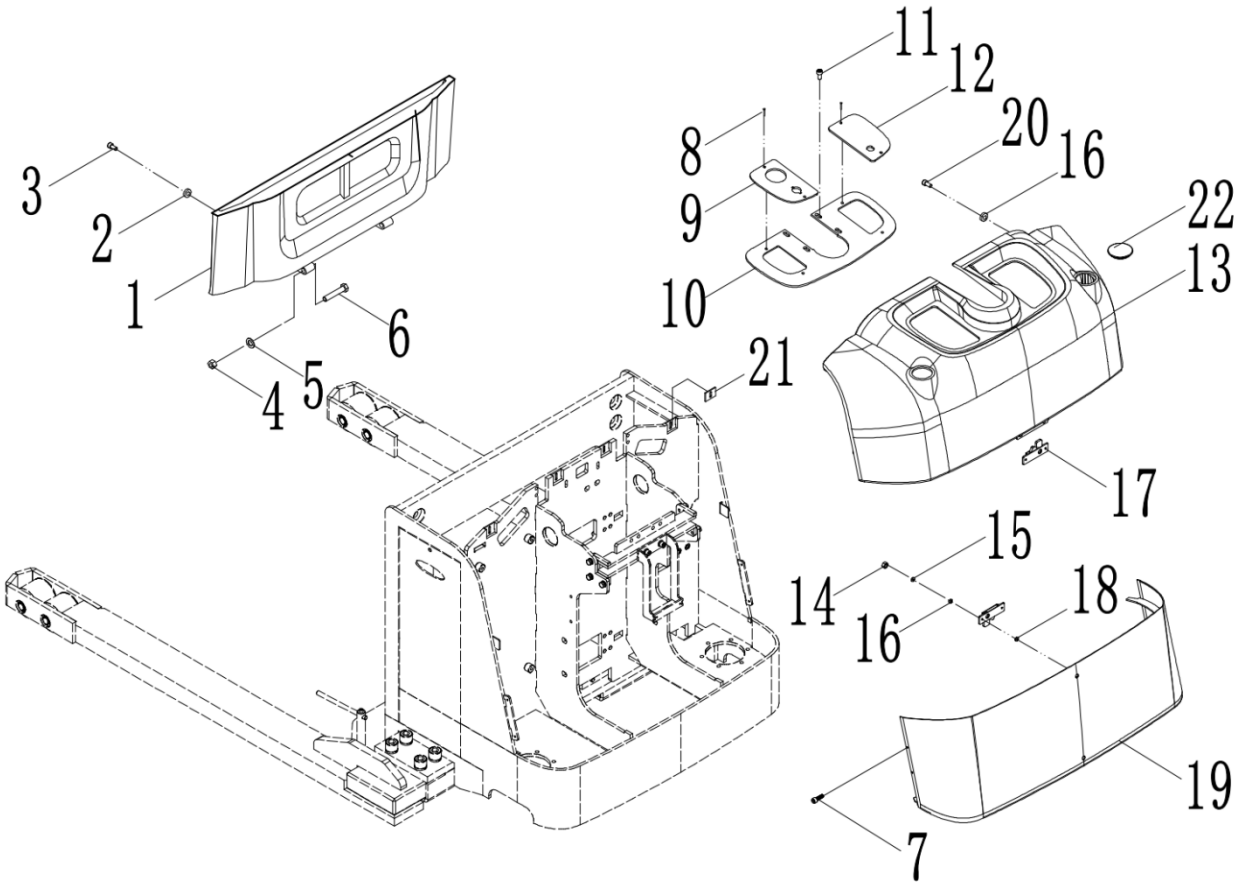

Index	Part No.	Drawing Number	Part Name	QTY	Remark
11	22101600028	GB70.2	Screw M6x20	4	
12	7200100002265	QBA30A0900007	Right plate	1	GREEN RAL6018
	7200100001718	QBA30A0900007	Right plate	1	Yellow RAL1037
13	7500010000105	QBA30A0900003	Upper cover	1	
14	22400300001	GB6170	Nut M5	4	
15	22501200002	GB93	Spring pad 5	4	
16	22500100003	GB97.1	Flat pad 5	8	
17	79000100001	943112C	Lock catch	2	
18	7200400000417	QBA30A0900001	gasket	2	
19	8B21200800002	QBA30A0910000	Lower cover	1	GREEN RAL6018
	8B21200800001	QBA30A0910000	Lower cover	1	Yellow RAL1037
20	22101600025	GB70.1	Screw M6x12	4	

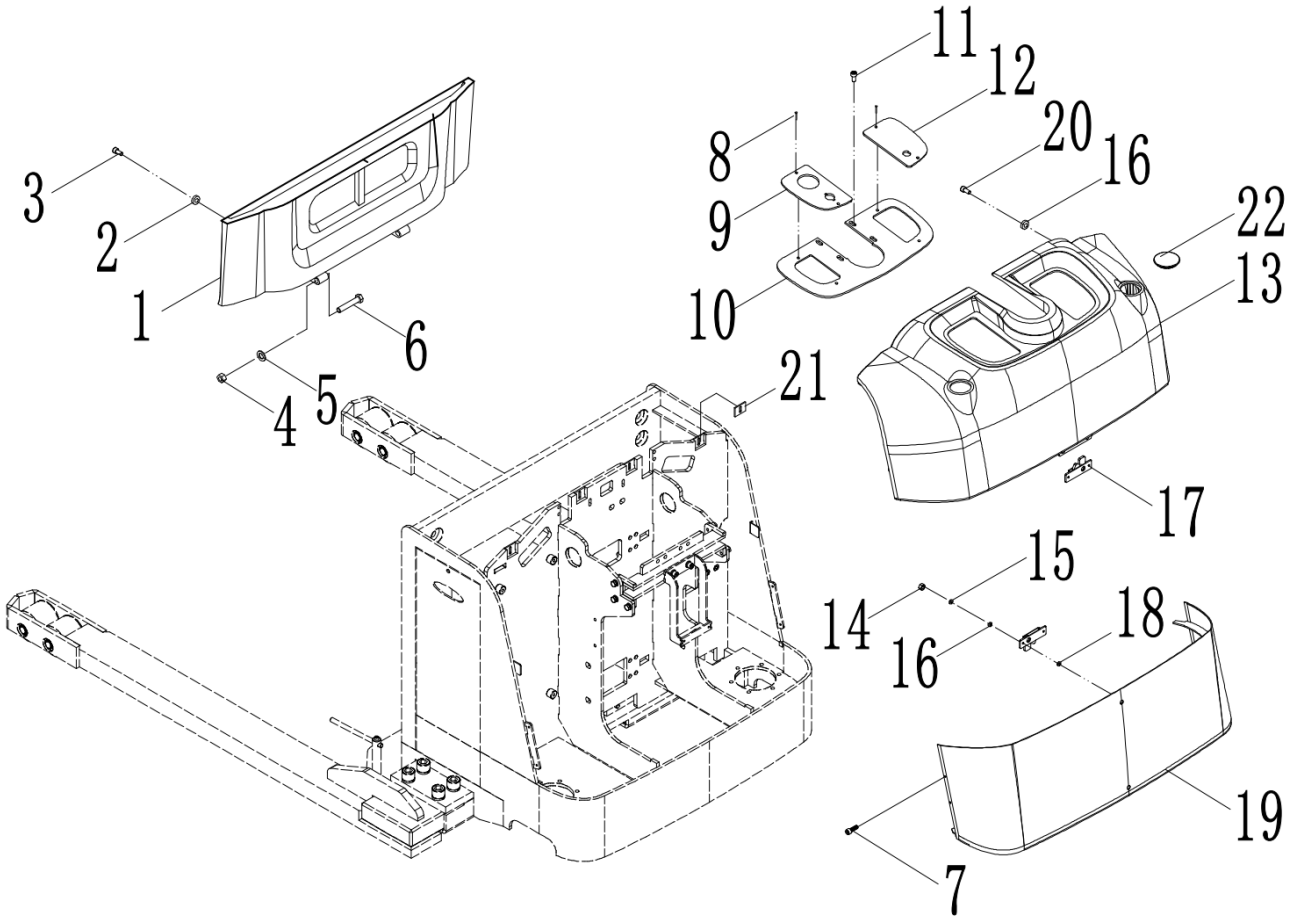

Index	Part No.	Drawing Number	Part Name	QTY	Remark
21	7200500000315	QBA30A0900004	u-clamp	4	
22	75000100104	QPA-0910001	Armlet cover	2	

Mast System - Triple mast

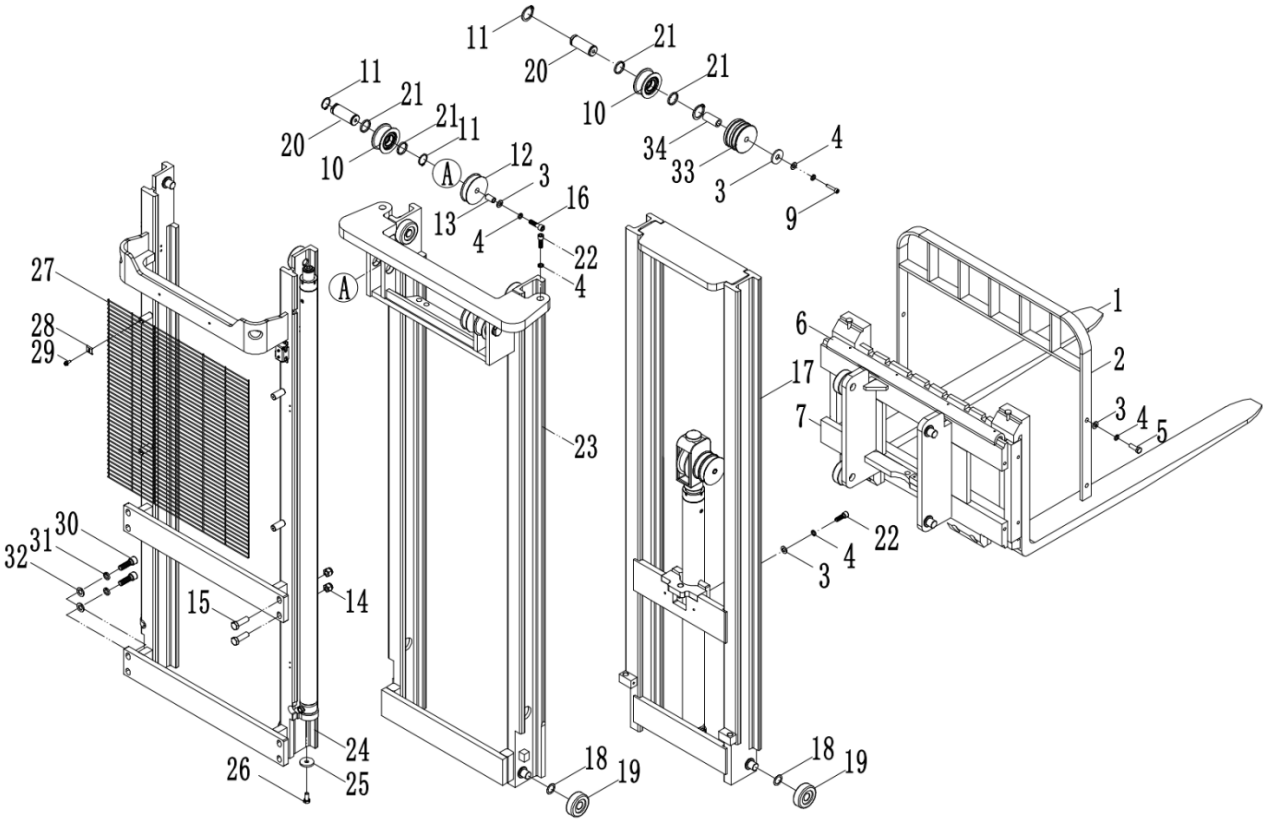

Index	Part No.	Drawing Number	Part Name	QTY
1	72003000614	P15S8901150	Fork assembly 35×100×1150	2
2	8D102006052	QPA13028280020	Rack welding 815	1
3	22501200006	GB93	Spring pad 12	12
4	22500200009	GB95	Flat pad 12	10
5	22000400004	GB5783	Hexagon head bolt M12×25	4
6	73008000006	BOA-05810	Side shifter 815	1
7	8D082011004	QDA-07350 240509	Forging lift platform welding	1
8	4000000001266	GB276	Deep groove ball bearing 6007-2RZ	8
9	22101600156	GB70.1	Hexagonal cylindrical head screw M12×90	2
10	8Q034000001	QQA20A8300010	Chain roller assembly	2
11	22600900007	GB894.1	Elastic retaining ring d35 for shaft	4
12	75000300012	QQA-02052	Nylon wheel	1

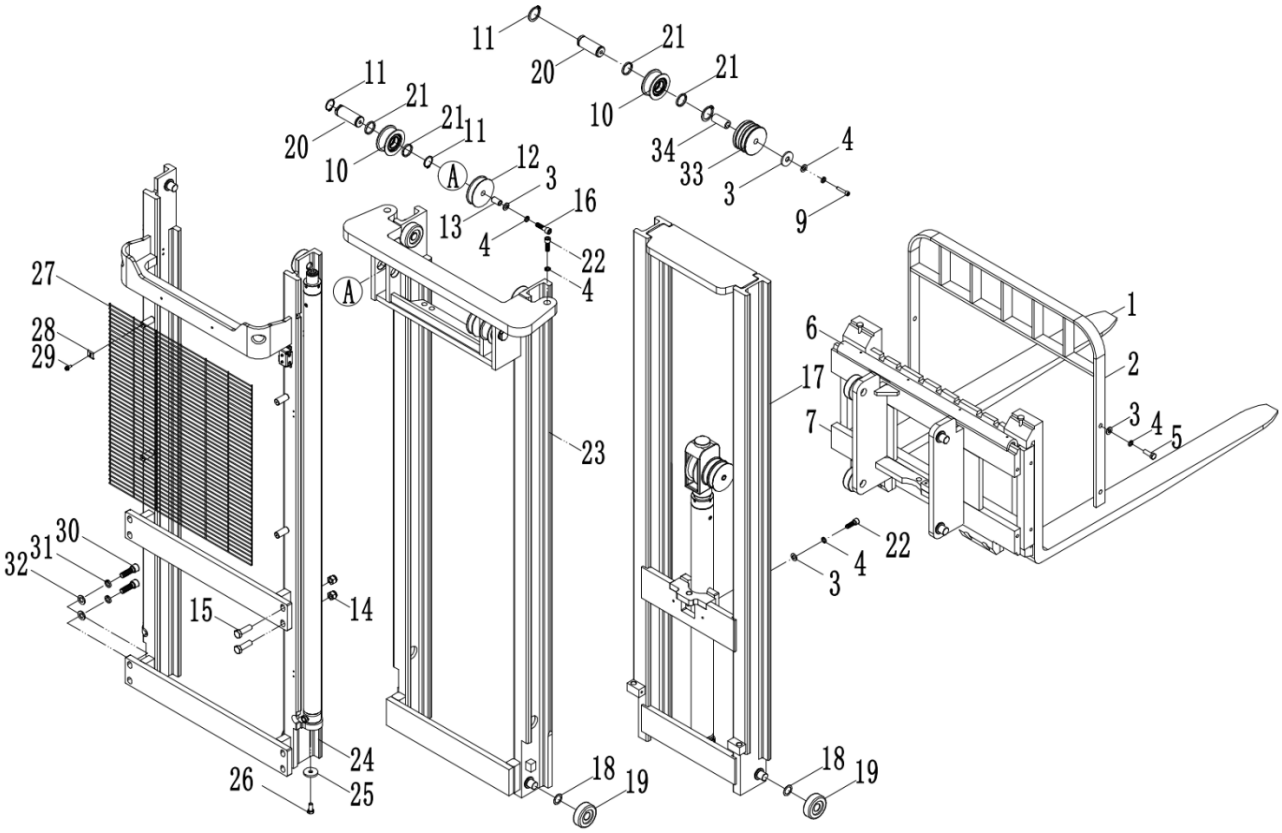

Index	Part No.	Drawing Number	Part Name	QTY	Remark
13	72004000108	QQA-02509	Spacer sleeve	1	
14	22403000012	GB889.1	Lock nut M16	4	
15	22000400011	GB5783	Hexagon bolt M16 x 50	4	
16	22101600106	GB70.1	Hexagonal cylindrical head screw M12×45	4	
17	8Q032000023	QQA20A8345300	Inner frame 4.5 m	1	
	8Q032000018	QQA20A8348300	Inner frame 4.8 m	1	
	8Q032000024	QQA20A8355300	Inner frame 5.5m	1	
18	72004000107	QDA-05018	Roller gasket	12	
19	71004000008	QDA-05017-78	Roller	12	
20	72003000168	QQA-02504A	Sprocket shaft	2	
21	7200400000489	QQA-02509B	Spacer sleeve	4	
22	22101600064	GB70.1	Hexagonal cylindrical head screw M12×35	6	

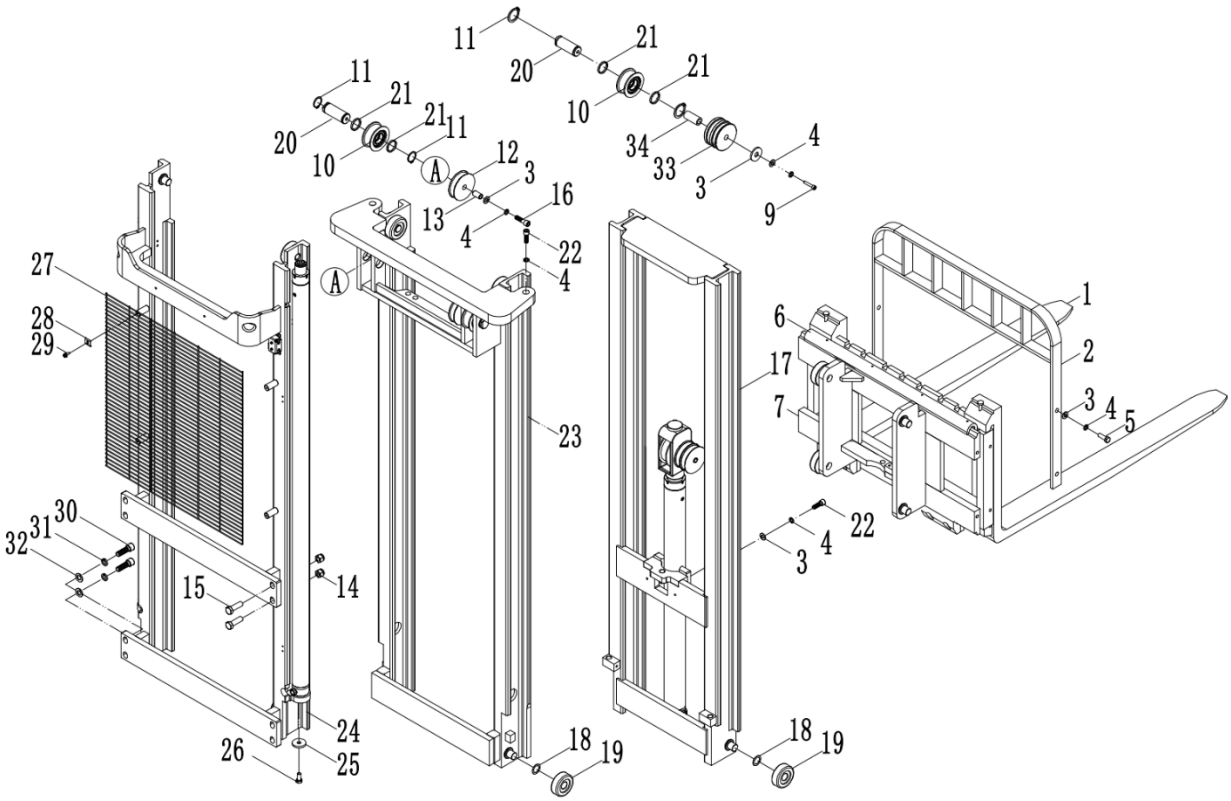

Index	Part No.	Drawing Number	Part Name	QTY	Remark
23	8Q032000025	QQA20A8345200	Middle frame 4.5 meters	1	
	8Q032000017	QQA20A8348200	Middle frame 4.8 meters	1	
	8Q032000026	QQA20A8355200	Middle frame 5.5 meters	1	
24	8D21200200016	QDA20D8345100 240509	Outer frame 4.5 meters	1	
	8D21200200017	QDA20D8348100 240509	Outer frame 4.8 meters	1	
	8D21200200018	QDA20D8355100 240509	Outer frame 5.5 meters	1	
25	72001007192	QDA20D8300002	gasket	2	
26	22000400004	GB5783	Hexagon head bolt M12×25	2	
27	79000500039	QDB158245101H 240509	Grid 4.5 m	1	
	79000500040	QDB158248101H 240509	Grid 4.8 m	1	
	79000500041	QDB158255101H 240509	Grid 5.5 m	1	
28	72002000191	BDA-00001	Fixed climb	6	

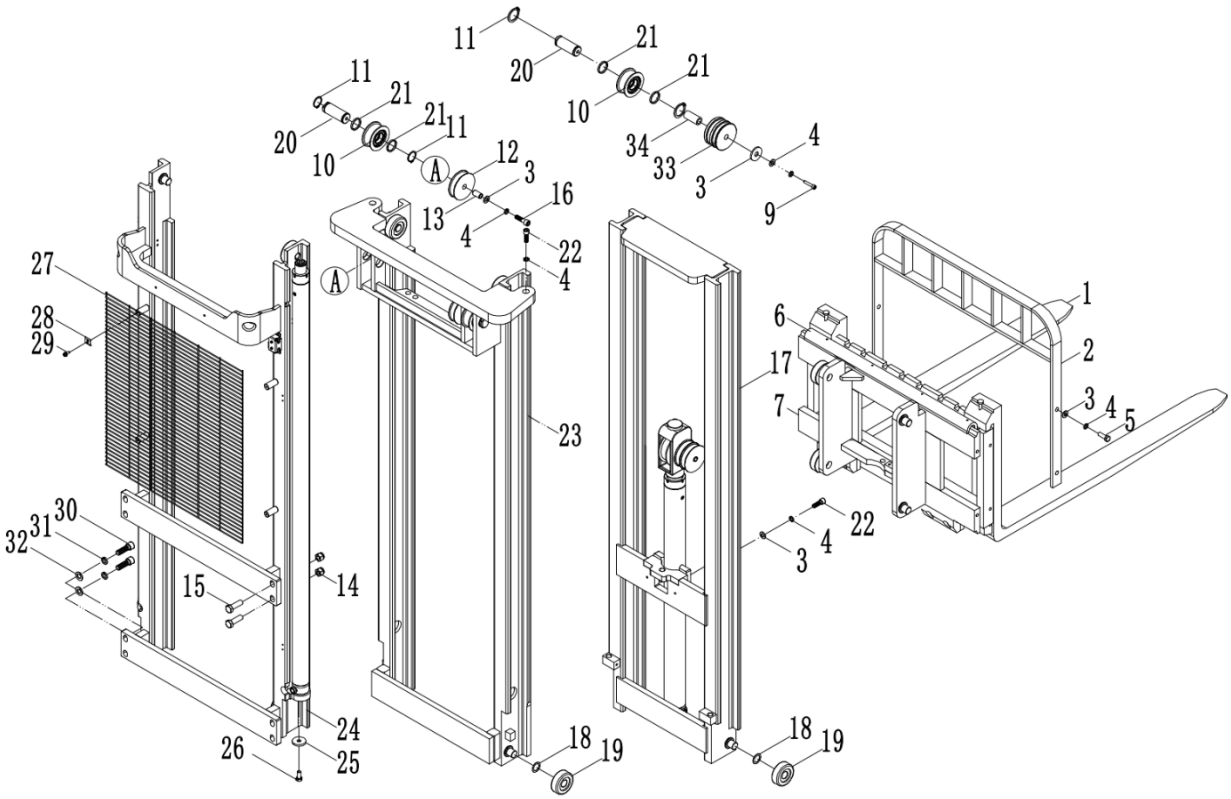

Index	Part No.	Drawing Number	Part Name	QTY	Remark
29	22000800001	GB5789	Hexagon flange bolts M6x16	6	
30	22101600075	GB70.1	Hexagonal cylindrical head screw M16×50	4	
31	22501200008	GB93	Spring pad 16	4	
32	22500100010	GB97.1	Flat pad 16	4	
33	75000300013	QQA-02505	Nylon wheel	1	
34	72004000136	BOA-06003	Pipe sleeve	1	

Gantry System - gantry chain

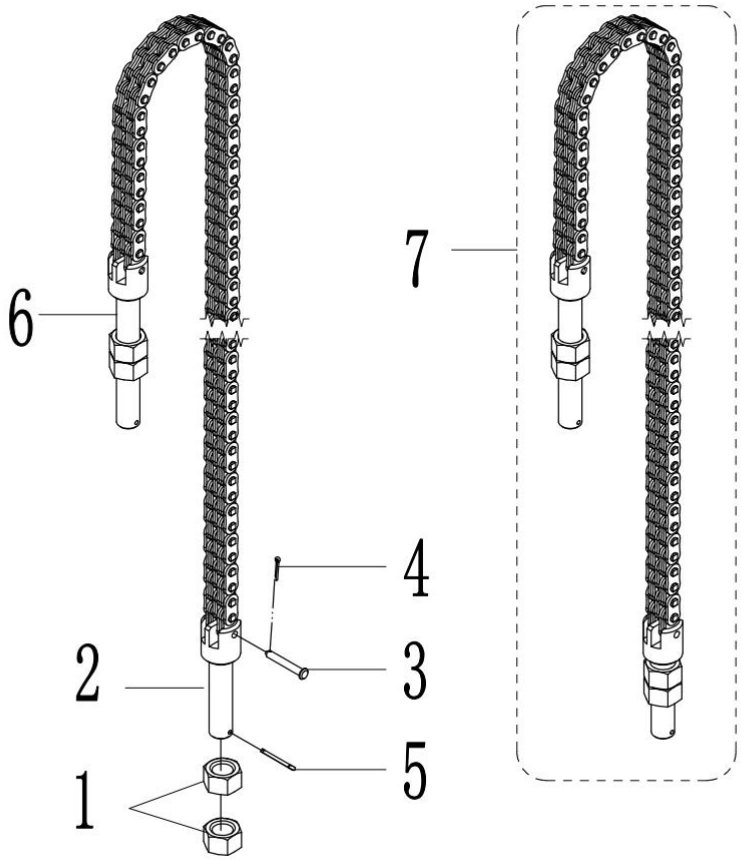

Index	Part No.	Drawing Number	Part Name	QTY	Remark
1	22400600003	GB6176	Hexagon nut M16 x 1.5	4	
2	72007000012	BDA-03039	Chain pull head	1	
3	22801700002	GB882	Pin type B B5×35	2	
4	22801600007	GB91	Cotter pin 2×12	2	
5	22801600003	GB91	Cotter pin 2.5×25	2	
6	72007000012	BDA-03039	Chain pull head	1	
7	71004200054	QDJ-0001145	Chain assembly 145 knots (4.5 m)	2	
	71004200055	QDJ-0001152	Chain assembly 152 knots (4.8 m)	2	
	71004200056	QDJ-0001169	Chain assembly 169 knots (5.5 m)	2	

Hydraulic system - three stage frame with side shift

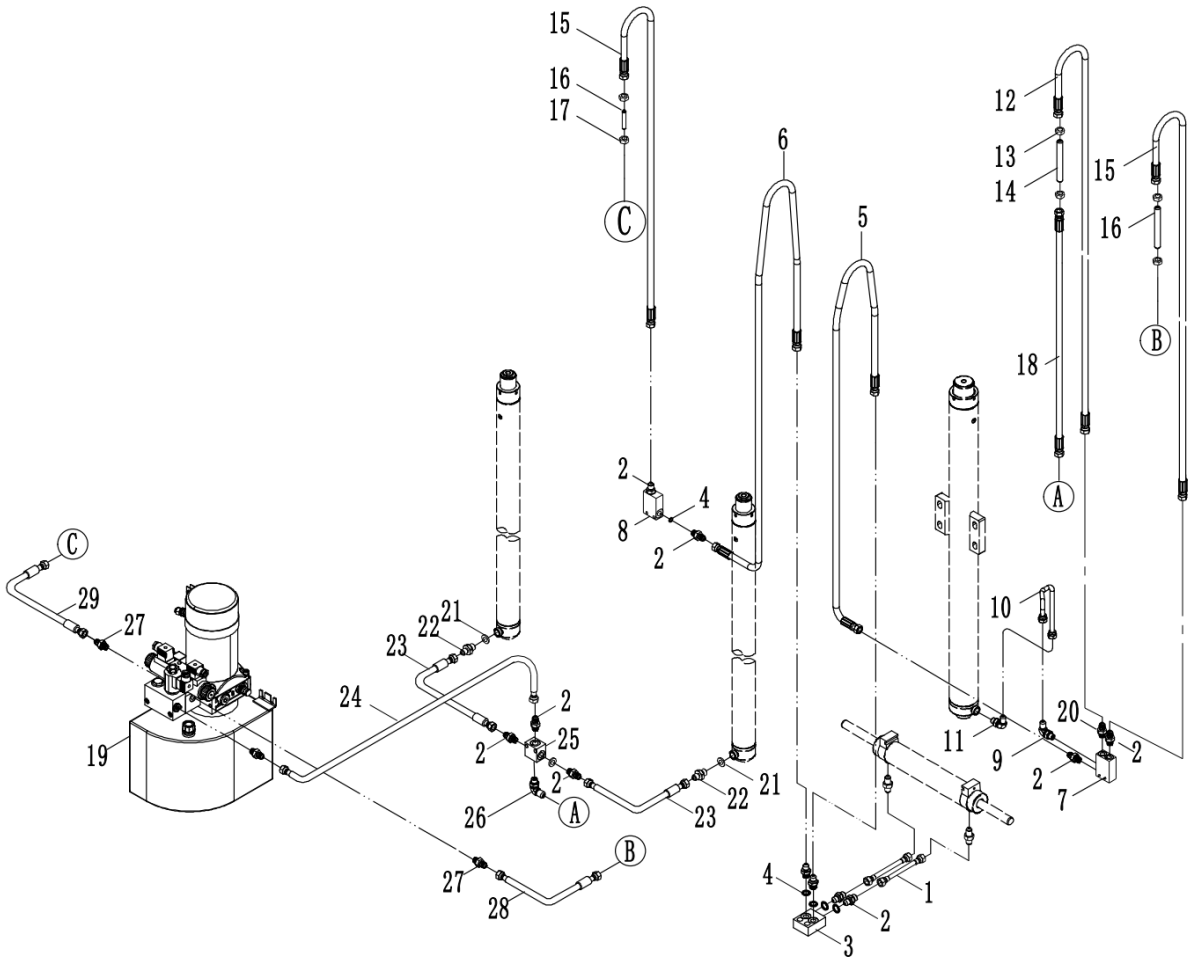

Index	Part No.	Drawing Number	Part Name	QTY	Remark
1	73004000166	YG-10002-316	No. 2 tubing	2	
2	73006000044	BDA-03021	Flaring fitting M14×1.5-M14×1.5	11	
3	73005000044	QQA-02717	Four way valve block	1	
4	21001100002	JB982	Combined seal gasket 14	7	
5	73004000126	YG-10001-2000	No. 1 tubing	1	4.5 m
	73004000213	YG-10001-2100	No. 1 tubing	1	4.8 m
	73004000581	YG-10001-2450	No. 1 tubing	1	5.5 m
6	73004000501	YG-10001-2050	No. 1 tubing	1	4.5 m
	7300400000246	YG-10001-2150	No. 1 tubing	1	4.8 m
	73004000582	YG-10001-2500	No. 1 tubing	1	5.5 m
7	73005000017	QQA-02309B	Valve block	1	
8	73005000032	QQA-02309A	Valve block	1	

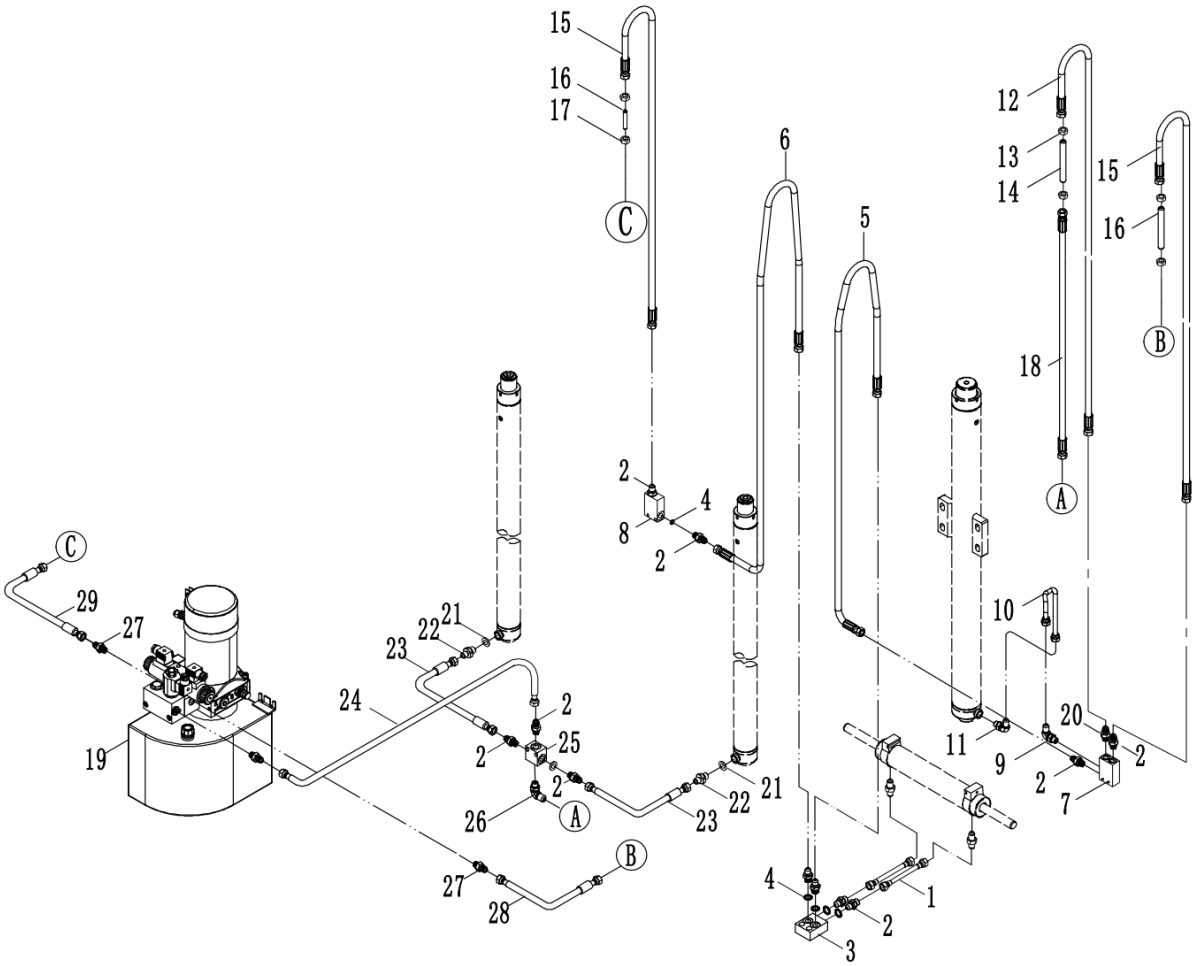

Index	Part No.	Drawing Number	Part Name	QTY	Remark
9	73006000025	1QH9-14-14OG	Right Angle joint M14×1.5	1	
10	73003010068	QQA20A8700010	Medium cylinder hard tube	1	
11	73006000057	1QH9-16-14OG	90° right Angle joint M16×1.5 - M14×1.5	1	
12	73004000403	YG-10003-1780	No. 3 tubing M16× 1.5L =1780	1	4.5 m
	73004000194	YG-10003-1900	No. 3 tubing M16× 1.5L =1900	1	4.8 m
	73004000393	YG-10003-2120	No. 3 tubing M16× 1.5L =2120	1	5.5 m
13	22400800005	GB6173	Thin hexagon nut M16 x 1.5	2	
14	7300600000098	QDA-32209	Connector M16×1.5×120	1	
15	73004000105	YG-10001-1780	No. 1 tubing M14× 1.5L =1780	2	4.5 m
	730040005239	YG-10001-1900	No. 1 tubing M14× 1.5L =1900	2	4.8 m
	73004000107	YG-10001-2120	No. 1 tubing M14× 1.5L =2120	2	5.5 m
16	73006000030	QQA-05010A	Connector M14×1.5×120	4	

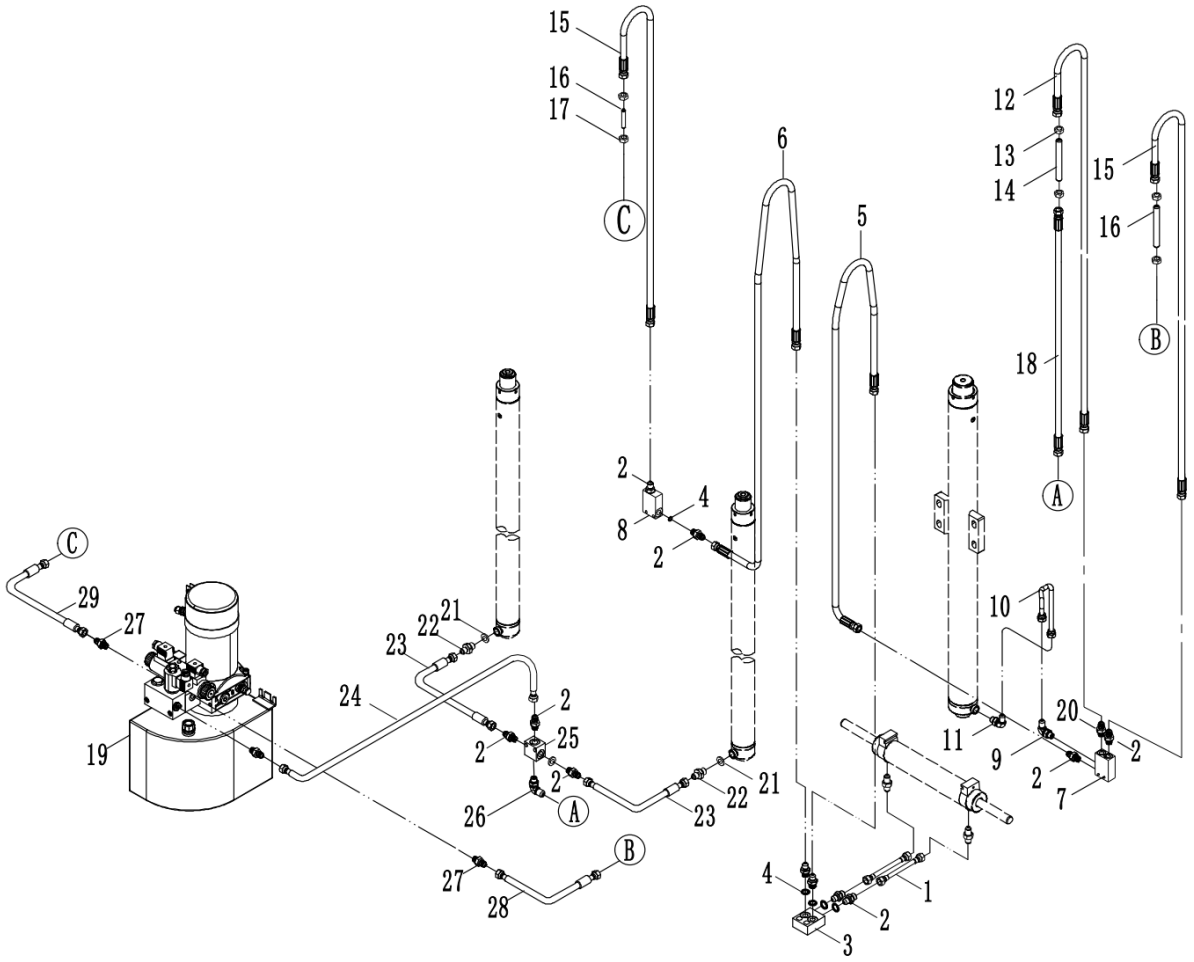

Index	Part No.	Drawing Number	Part Name	QTY	Remark
17	22400800004	GB6173	Thin hexagon nut M14 x 1.5	4	
18	73004000194	YG-10003-1900	No. 3 tubing L=1900	1	4.5 m
	73004000604	YG-10003-2000	No. 3 tubing L=2000	1	4.8 m
	73004000580	YG-10003-2200	No. 3 tubing L=2200	1	5.5 m
19	73002000112	QDA-03010F	Hydraulic station 24V/3KW	1	
20	73006000055	1QH-16-14	Connector M16×.5/M14×1.5	1	
21	21001100003	JB982	Combined seal gasket 16	2	
22	73006000100	1QH-14-16	Connector M14x1.5-M16x1.5	2	
23	73004000166	QDA-03030	Hose assembly -316	2	
24	73004000366	YG-10002-1000	No. 2 tubing	1	
25	7200100001660	QDA-32201	Four way oil block	1	

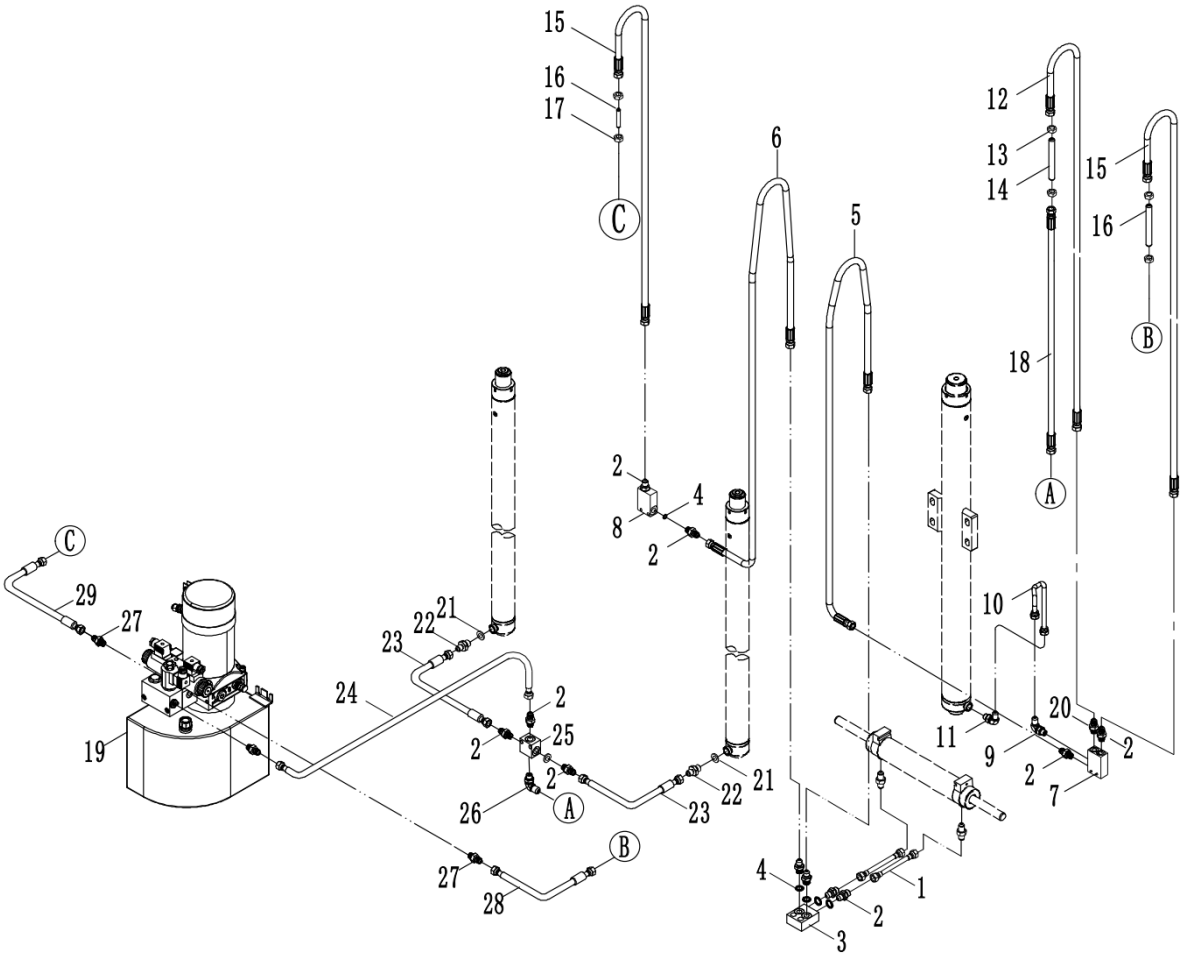

Index	Part No.	Drawing Number	Part Name	QTY	Remark
26	73006000122	1QH9-16-14OG	Right Angle joint M16×1.5/M14×1.5	1	
27	73005000074	QDA15D1200001	Connector M14×1.5/G1/4"	2	
28	73004000592	YG-10002-2100	No. 2 tubing 4.5 meters	1	
	73004000593	YG-10002-2200	No. 2 tubing is 4.8 meters	1	
	73004000594	YG-10002-2440	Tubing No. 2 is 5.5 meters	1	
29	73004000530	YG-10002-2980	No. 2 tubing 4.5 meters	1	
	73004000531	YG-10002-3080	No. 2 tubing is 4.8 meters	1	
	73004000529	YG-10002-3320	Tubing No. 2 is 5.5 meters	1	

Hydraulic system - Side cylinder

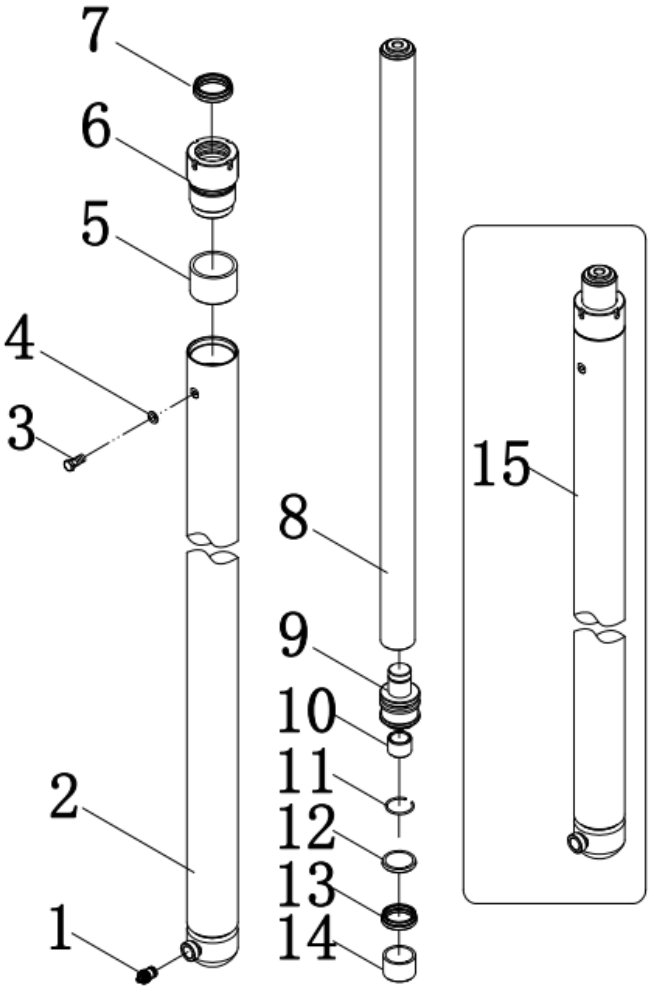

Index	Part No.	Drawing Number	Part Name	QTY	Remark
1	73005000019	BOA-03030	Explosion-proof valve assembly	1	
2	8D21200200019	QDA15D8345810	Cylinder welded 4.5 m	1	
	8D21200200020	QDA15D8348810	Cylinder welded 4.8 m	1	
	8D21200200021	QDA15D8355810	Cylinder welded 5.5 m	1	
3	7300600000100	QDA1502E1200105	Muffler (flat head type) M6x1	1	
4	21001100010	JB982	Combined seal gasket 6	1	
5	23100100068	SF-1-3840	Composite bushing	1	
6	72003001268	QDA15D8300850	Cylinder cover	1	
7	21000300005	DHS38	Dust ring 38 x 46 x 5 x 6.5	1	
8	72003001269	QDA15D8345820	Piston rod 4.5 m	1	
	72003001270	QDA15D8348820	Piston rod 4.8 m	1	
	72003001271	QDA15D8355820	Piston rod 5.5 m	1	

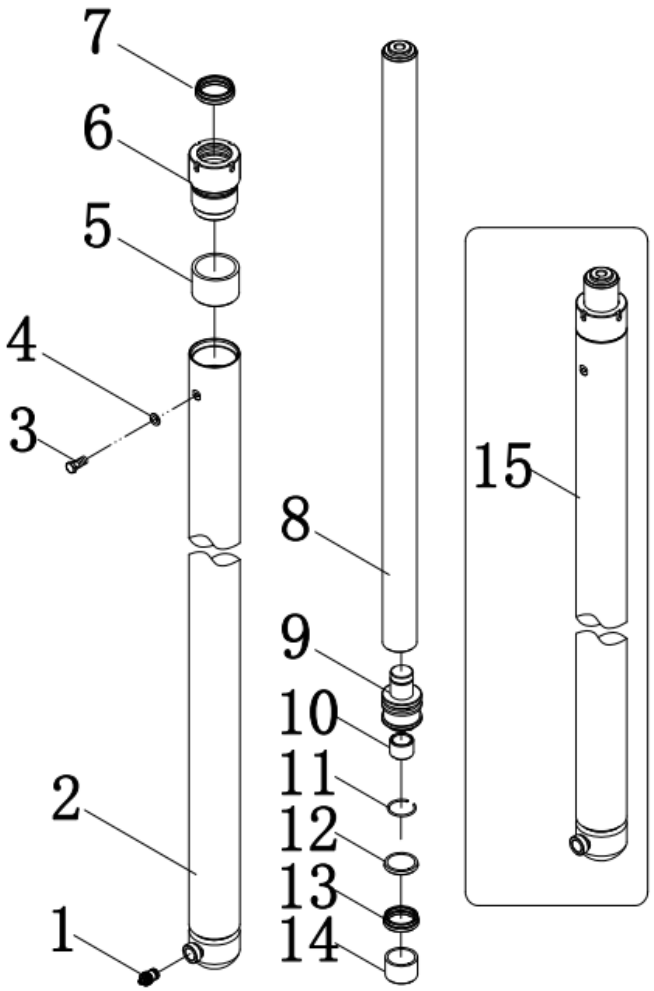

Index	Part No.	Drawing Number	Part Name	QTY	Remark
9	72003001272	QDA20D8300830	piston	1	
10	75000100144	QDA15D8300840	Buffer sleeve	1	
11	22601200013	GB895.1	Hole retaining ring 28	1	
12	40000000601	QDA20D8300803	Retaining ring 35×45×2	1	
13	21000400006	UHS35	Seal ring 35×45×6	1	
14	21000800015	QDA15D8300802	Guide ring 40×45×14.8	1	
15	73003010020	QDA20D8345800	Side cylinder 4.5 m	2	
	73007000328	QDA20D8348800	Side cylinder 4.8 m	2	
	73003010022	QDA20D8355800	Side cylinder 5.5 m	2	

Index	Part No.	Drawing Number	Part Name	QTY
1		QDA20D8345900	2.0t medium cylinder three full free 4.5 m	1
		QDA20D8348900	2.0t medium cylinder three full free 4.8m	1
		QDA20D8355900	2.0t medium cylinder three full free 5.5 m	1

Power system - lead-acid battery

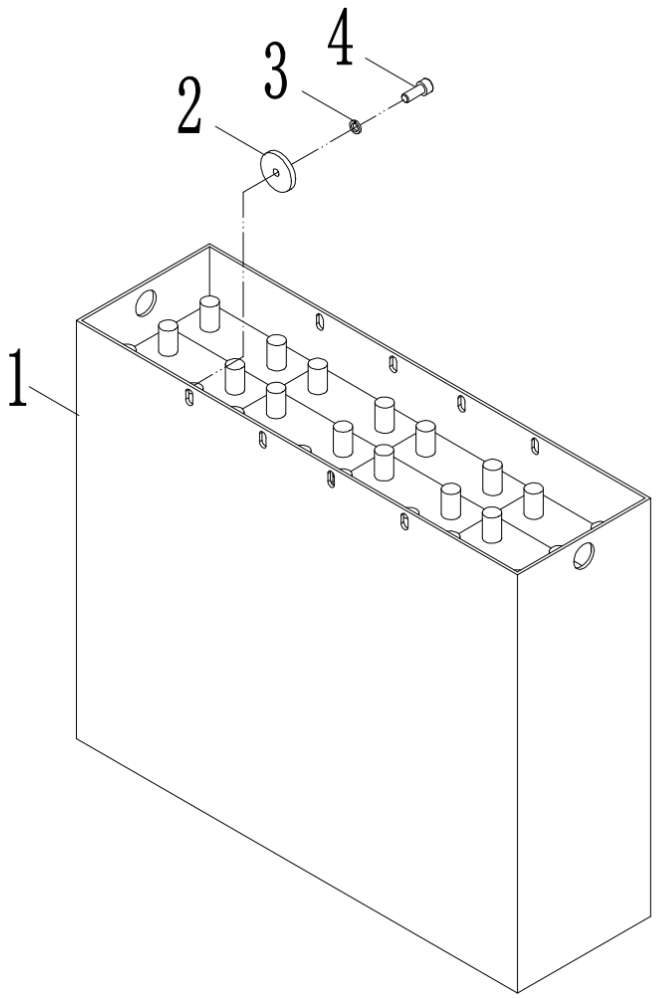

Index	Part No.	Drawing Number	Part Name	QTY	Remark
1	11009000018	QBA-08300	Battery assembly 24V/3PZB210H	1	
2	72001000446	QBA-02006	Floating frame limit washer	2	
3	22501200004	GB93	Standard spring washer 8	2	
4	22101600034	GB70.1	Screw M8×20	2	

Power system - Lithium battery

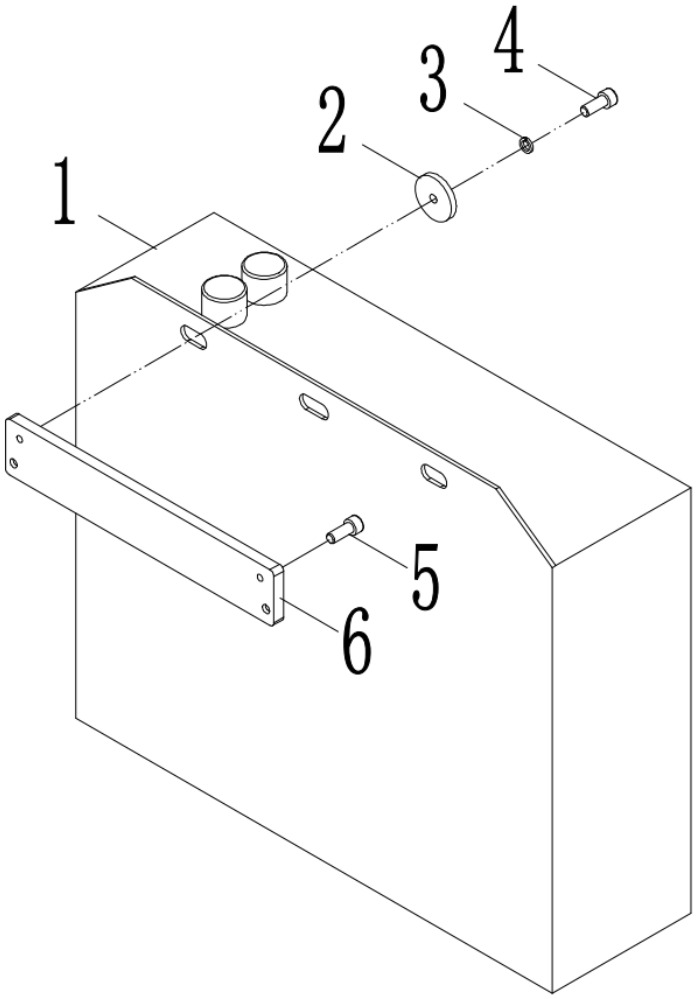

Index	Part No.	Drawing Number	Part Name	QTY	Remark
1	11009000091	QQA15-0101011	Lithium battery 150Ah	1	
2	72001000446	QBA-02006	Floating frame limit washer	2	
3	22501200004	GB93	Standard spring washer 8	2	
4	22101600034	GB70.1	Screw M8×20	2	
5	22101600032	GB70.1	Screw M8×12	2	
6	8B21500000034	QBA30A010001	Lithium fixed plate	1	